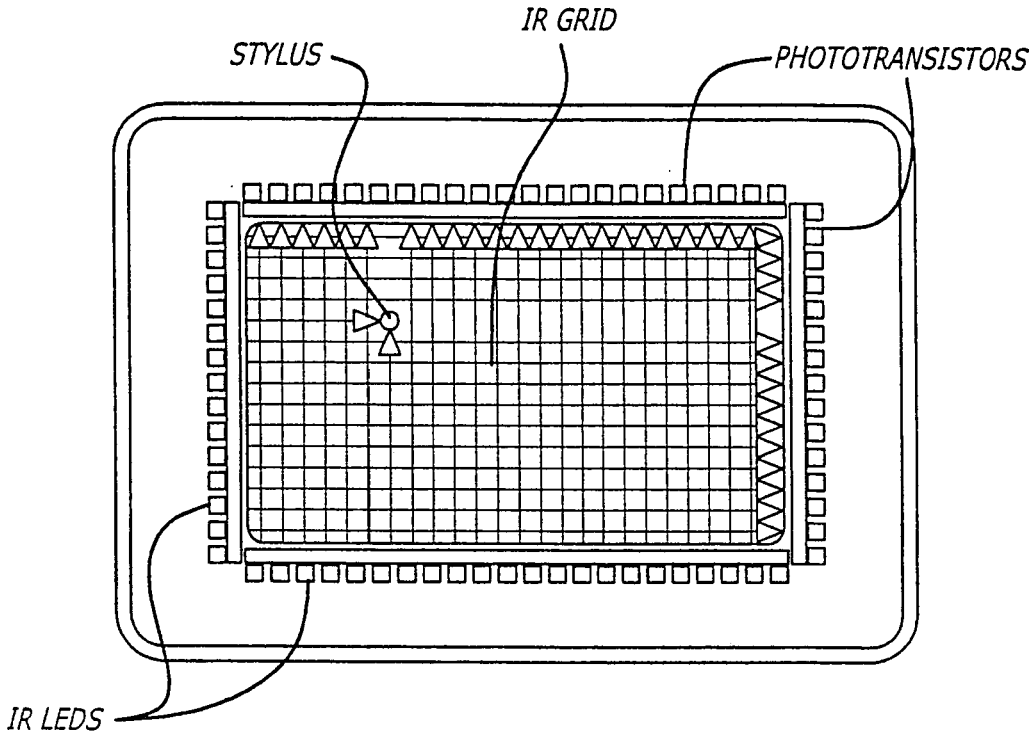

FIG. 1 PRIOR ART

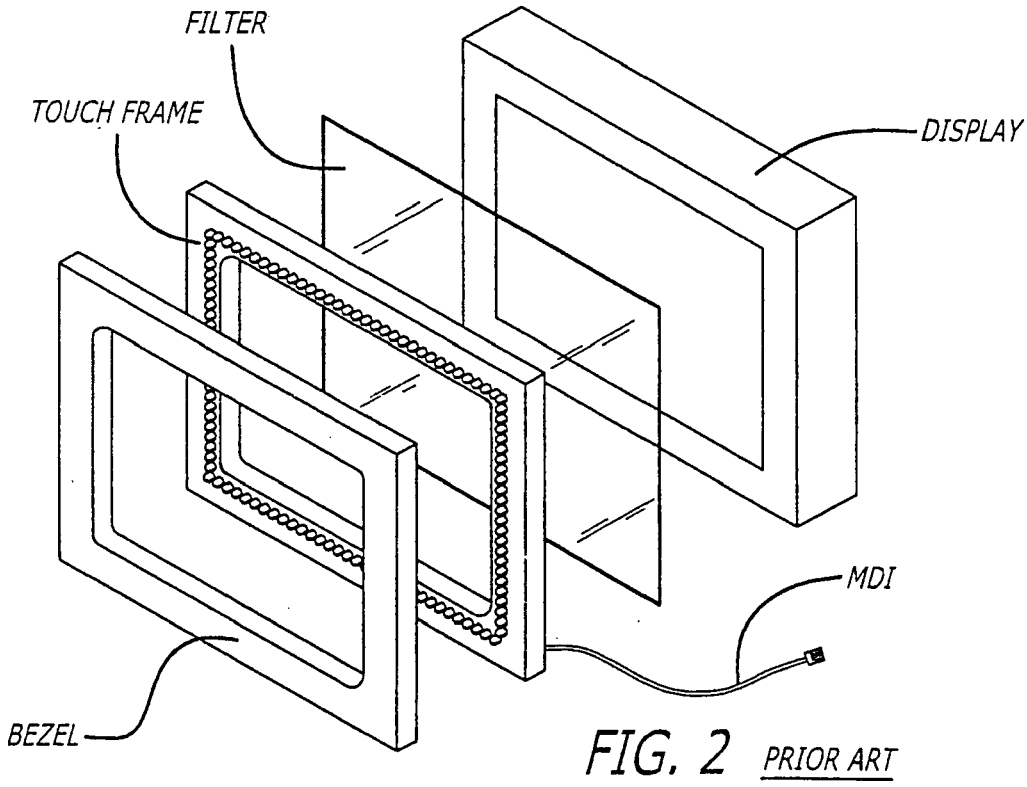

FIG. 2 PRIOR ART