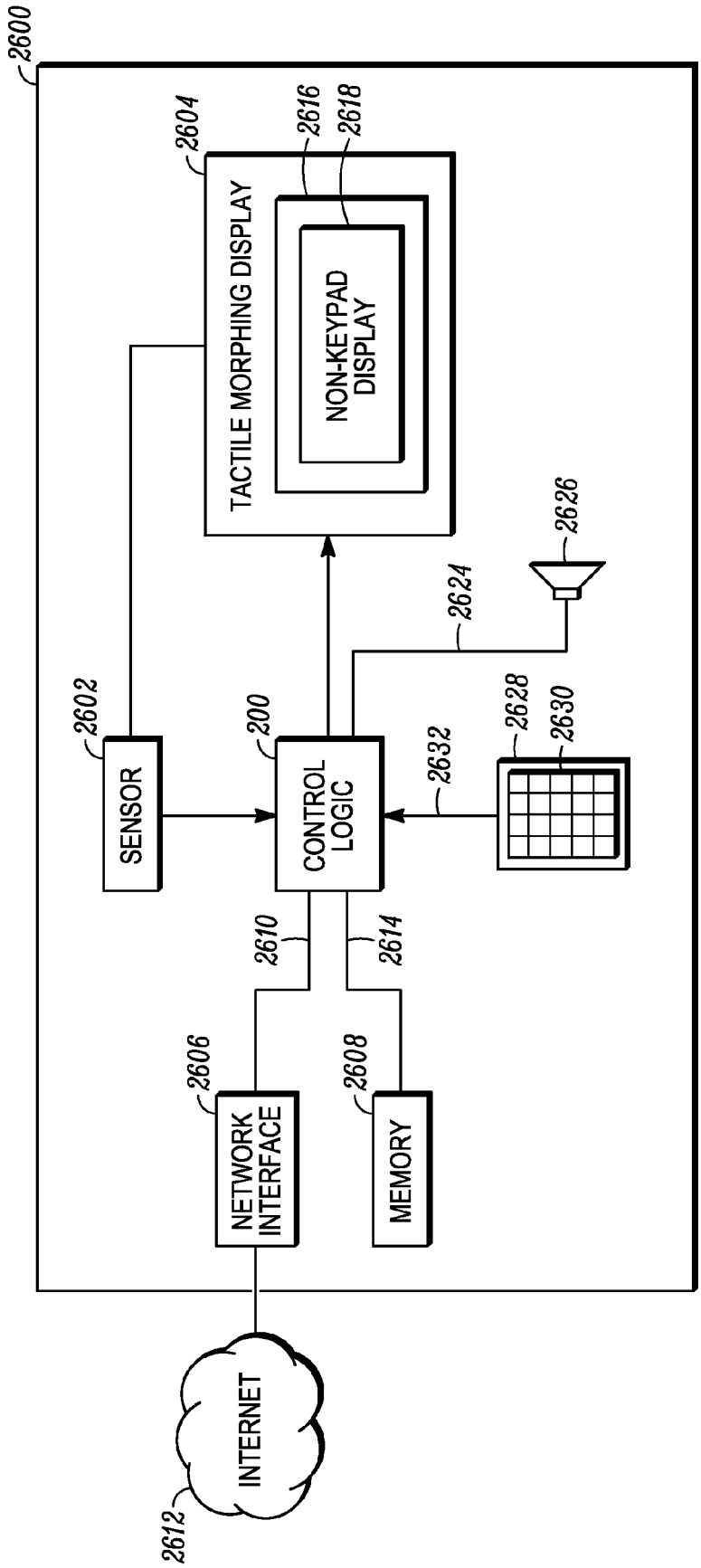
2600
2604
2616
2618
TACTILE MORPHING DISPLAY
NON-KEYPAD DISPLAY
2626
2624
2602
200
2628
2630
2632
SENSOR
CONTROL LOGIC
2610
2614
2606
2608
NETWORK INTERFACE
MEMORY
INTERNET
2612

FIG. 26