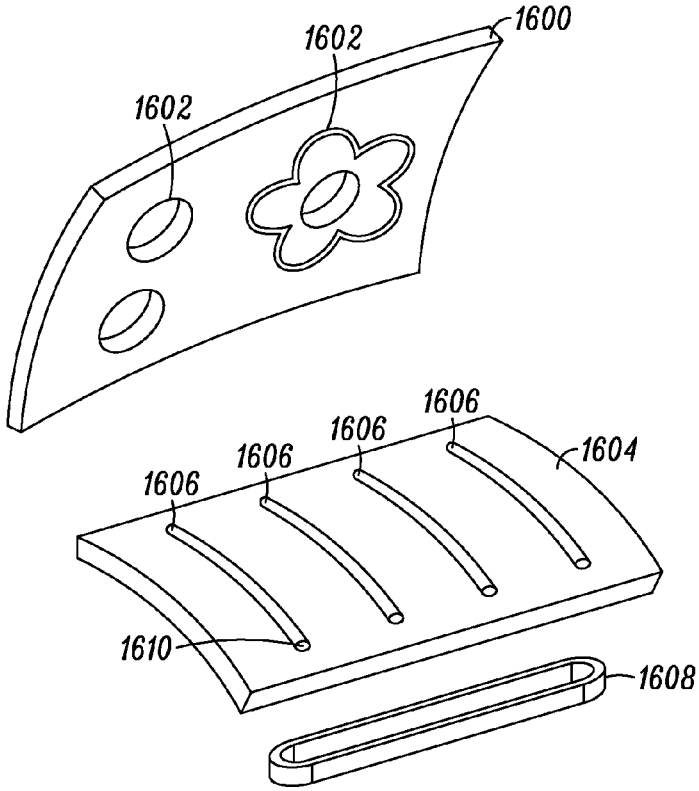
1600
1602
1602
1606
1606
1606
1606
1604
1610
1608

FIG. 16

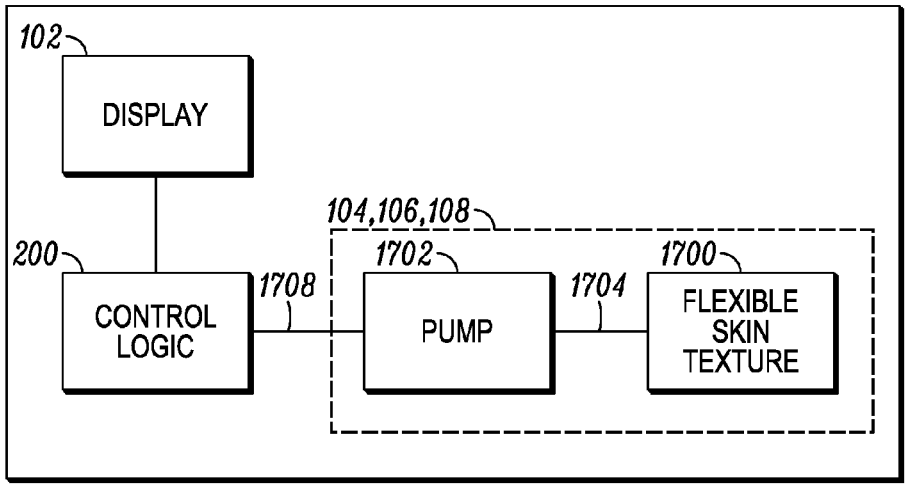
102
DISPLAY
104,106,108
200
CONTROL LOGIC
1708
1702
PUMP
1704
1700
FLEXIBLE SKIN TEXTURE

FIG. 17