FIG. 1

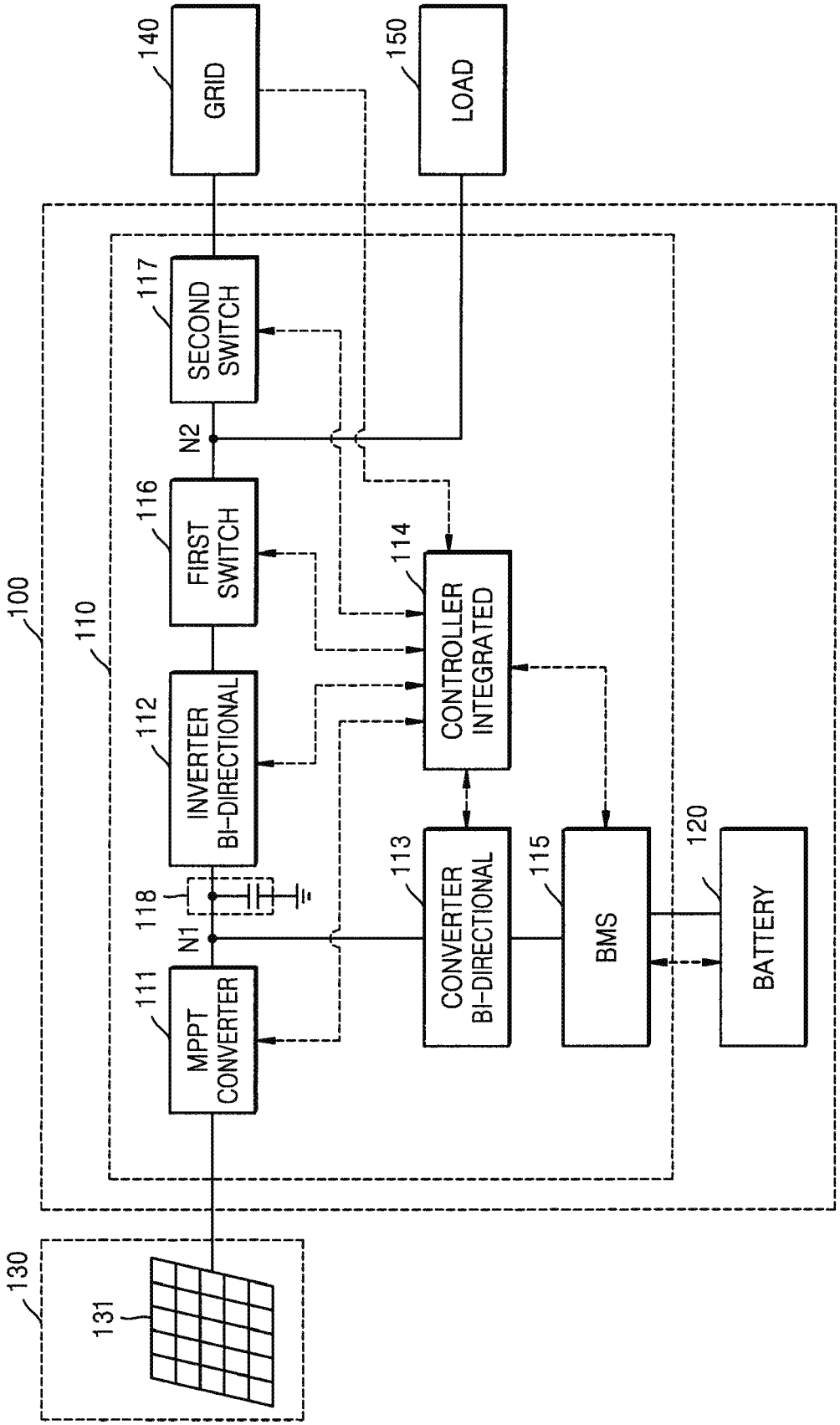
100
110
130
131
111
MPPT CONVERTER
118
N1
112
INVERTER BI-DIRECTIONAL
116
FIRST SWITCH
N2
117
SECOND SWITCH
140
GRID
150
LOAD
113
CONVERTER BI-DIRECTIONAL
114
CONTROLLER INTEGRATED
115
BMS
120
BATTERY