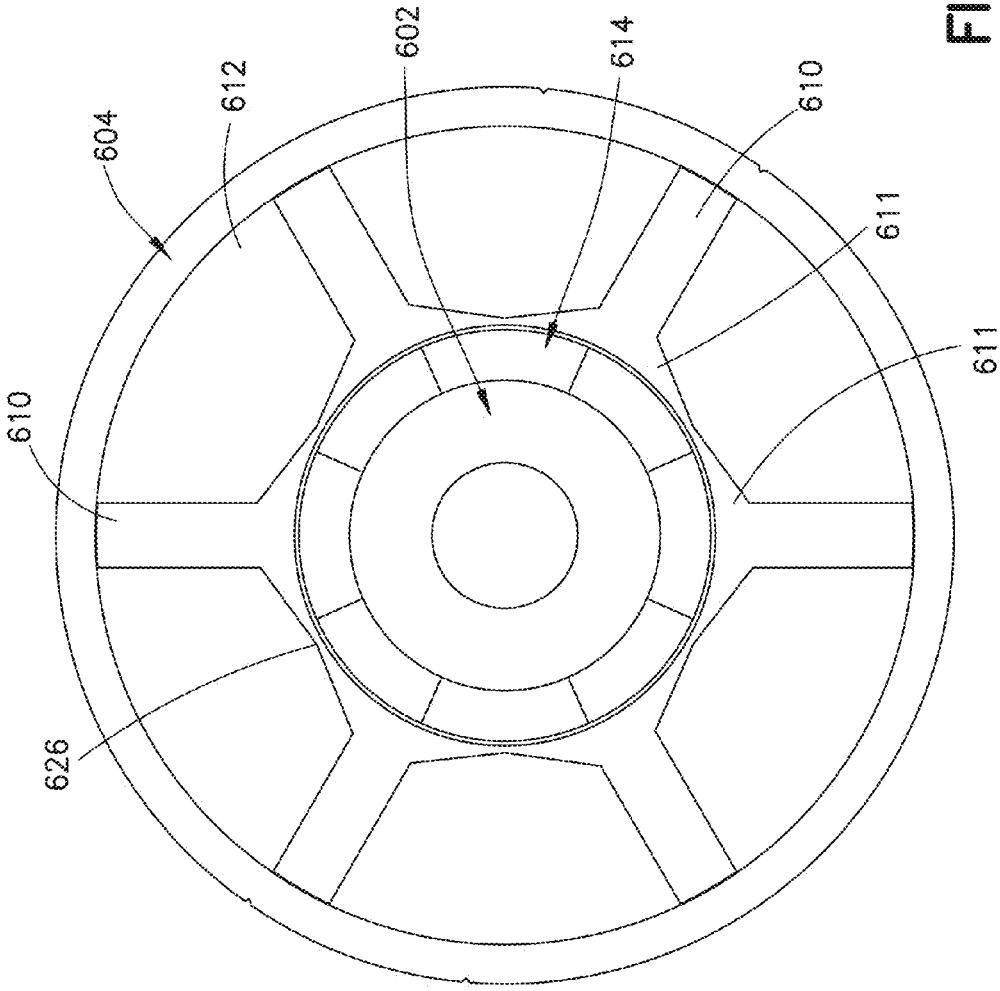

FIG.6A