US 20020190961A1

(19) United States

(12) Patent Application Publication

(10) Pub. No.: US 2002/0190961 A1

(43) Pub. Date: Dec. 19, 2002

Chen

(54) CURRENT-TYPE TOUCH CONTROL PANEL

(75) Inventor: **Chi Ruey Chen**, Chung-Li City (TW)

Correspondence Address:
BACON & THOMAS, PLLC
625 SLATERS LANE
FOURTH FLOOR
ALEXANDRIA, VA 22314

(73) Assignee: **eTurboTouch Technology Inc.**, Taiwan (TW)

(21) Appl. No.: **09/931,236**

(22) Filed: **Aug. 17, 2001**

(30) **Foreign Application Priority Data**

Jun. 13, 2001 (TW) 90209922

Publication Classification

(51) **Int. Cl.**[7] **G02F 1/1335**

(52) **U.S. Cl.** **345/173**

(57) **ABSTRACT**
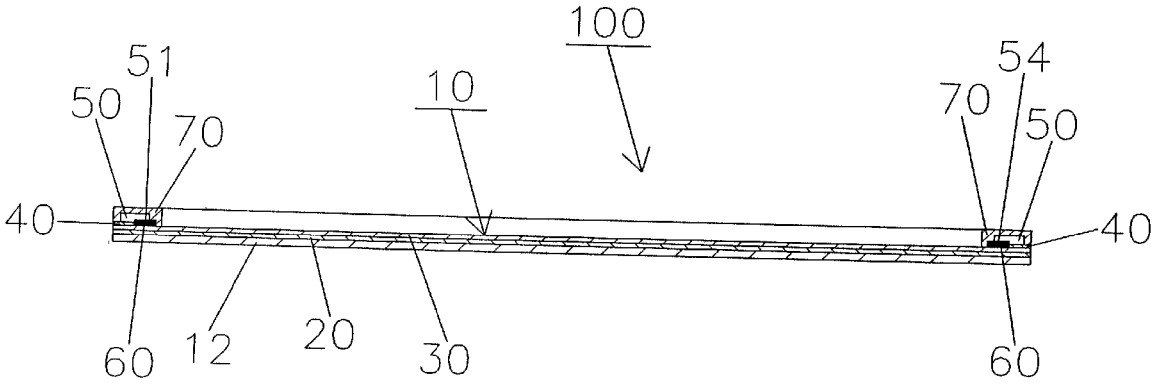
A flexible, current-type touch control panel comprises a current-type touch control shield consisting of a plurality of material layers and being printed on a flexible, transparent plastic membrane, thus forming the flexible, current-type touch control panel which is flexibly bendable to an angle of at least from 0°-180°.