FIG. 1

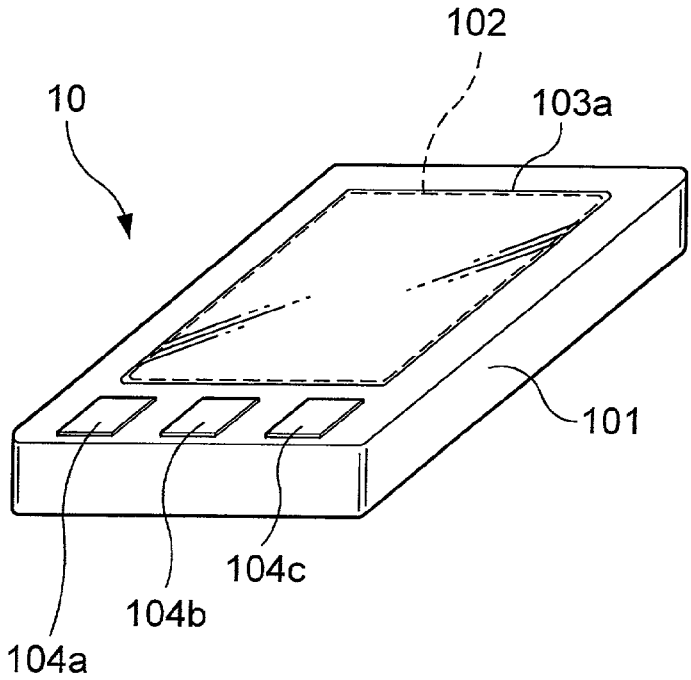
102
10
103a
101
104c
104b
104a

FIG. 2

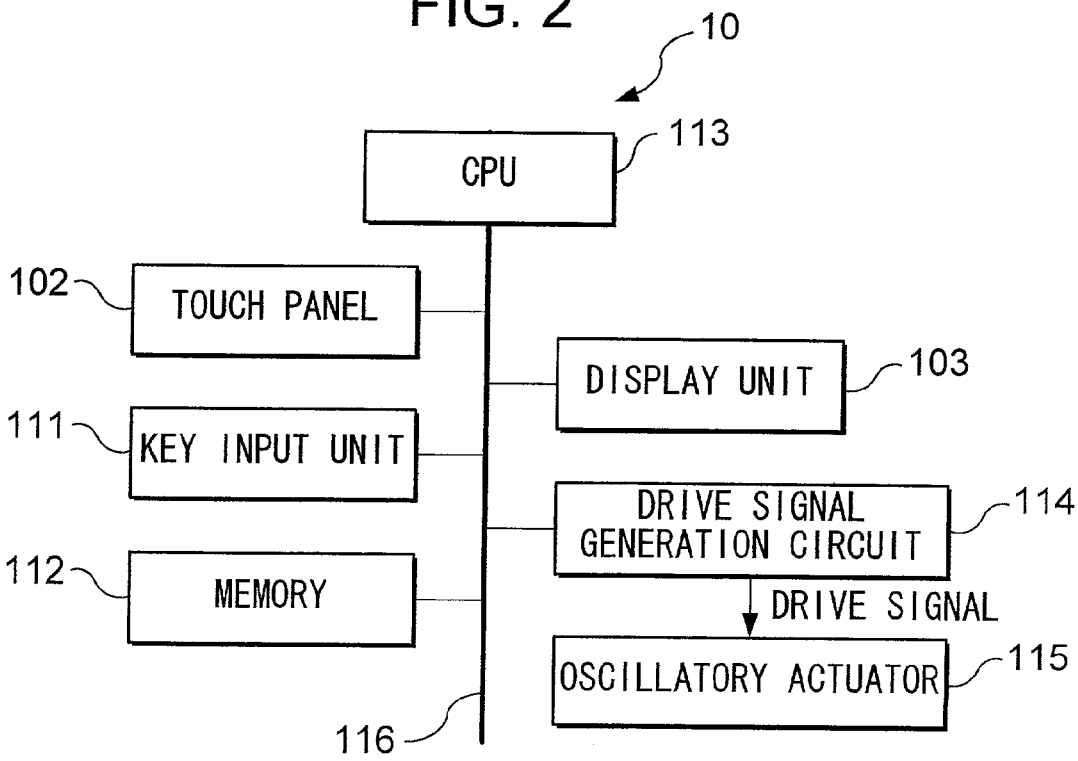
10
CPU
113
102
TOUCH PANEL
DISPLAY UNIT
103
111
KEY INPUT UNIT
DRIVE SIGNAL GENERATION CIRCUIT
114
112
MEMORY
DRIVE SIGNAL
OSCILLATORY ACTUATOR
115
116