FIG. 76

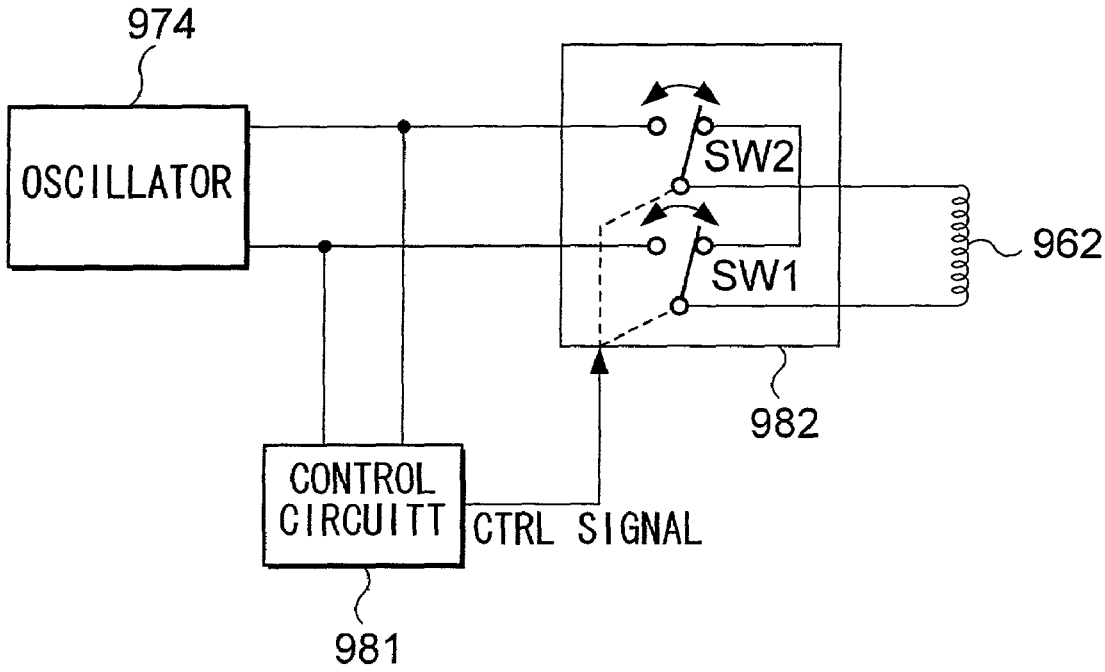
974
OSCILLATOR
SW2
SW1
962
982
CONTROL CIRCUITT
CTRL SIGNAL
981

FIG. 77

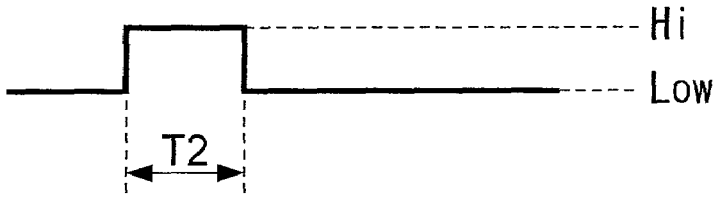
Hi
Low
T2