FIG. 82

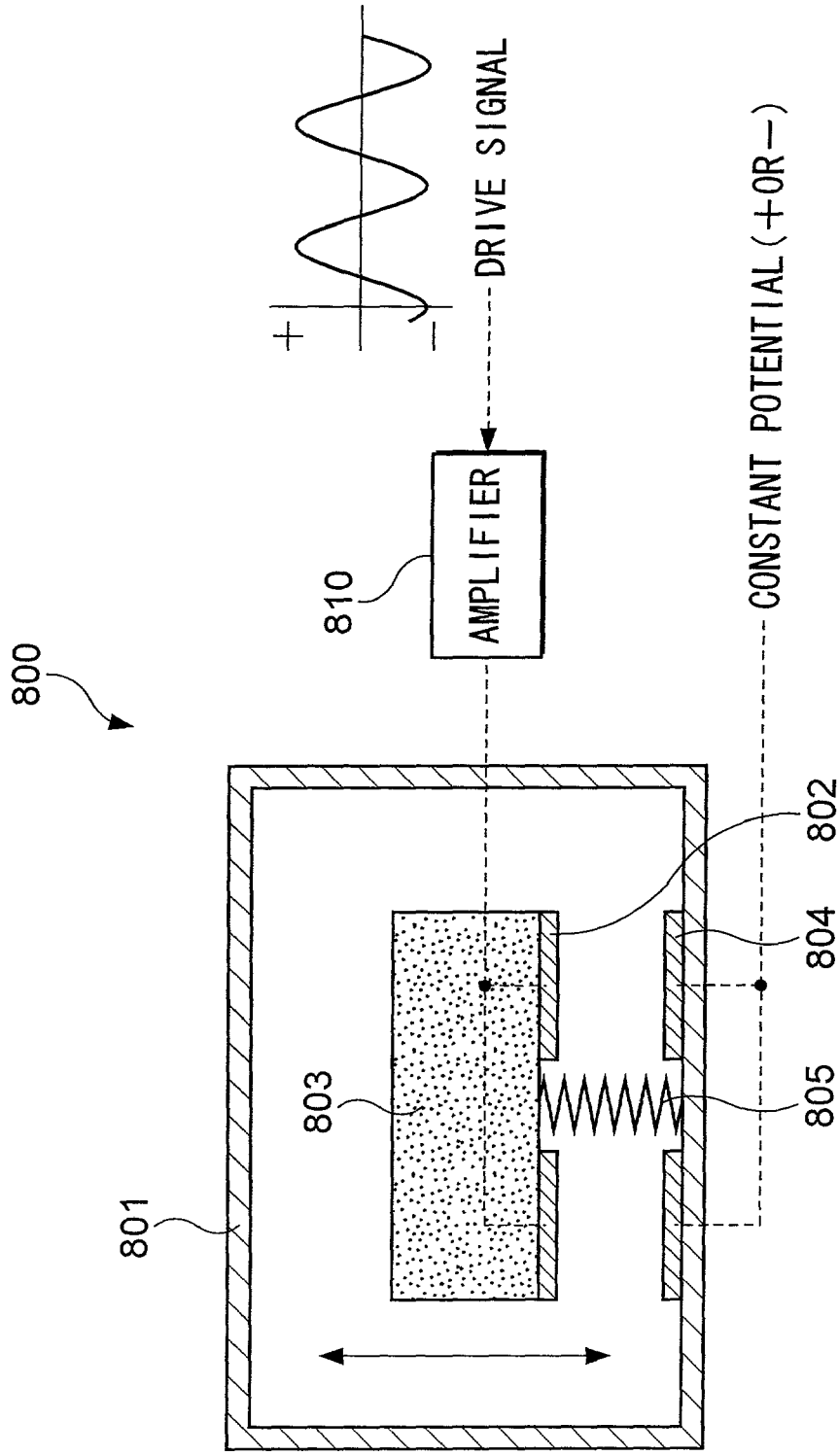
800
810
AMPLIFIER
DRIVE SIGNAL
+
−
CONSTANT POTENTIAL (+OR−)
801
802
803
804
805