FIG. 12

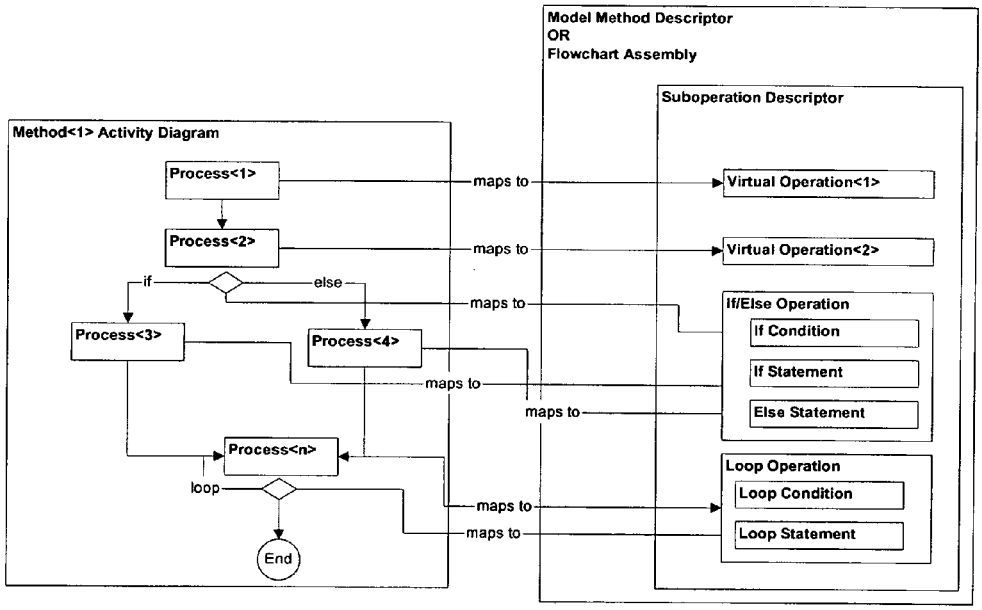
Model Method Descriptor
OR
Flowchart Assembly
Suboperation Descriptor
Method<1> Activity Diagram
Process<1>
Process<2>
if
else
Process<3>
Process<4>
Process<n>
loop
End
maps to
maps to
maps to
maps to
maps to
maps to
maps to
Virtual Operation<1>
Virtual Operation<2>
If/Else Operation
If Condition
If Statement
Else Statement
Loop Operation
Loop Condition
Loop Statement