FIG. 6

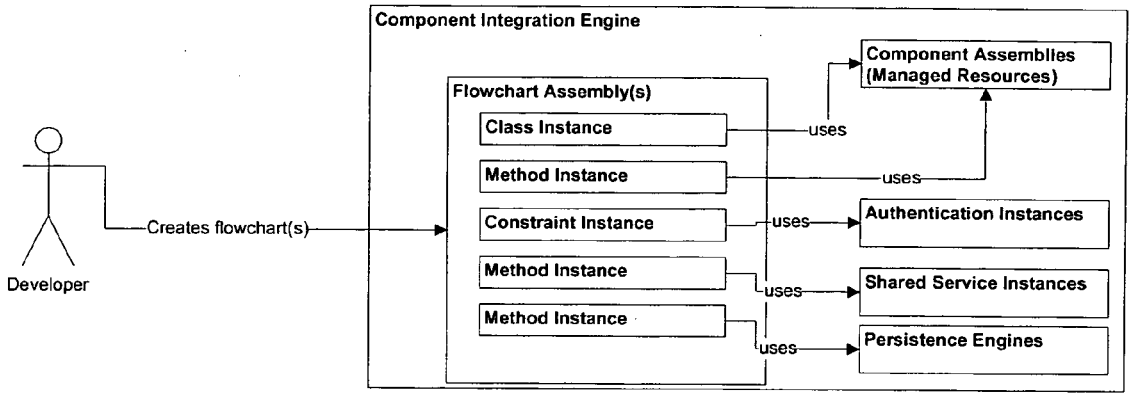
Component Integration Engine
Flowchart Assembly(s)
Class Instance
Method Instance
Constraint Instance
Method Instance
Method Instance
Developer
Creates flowchart(s)
uses
uses
uses
uses
uses
Component Assemblies (Managed Resources)
Authentication Instances
Shared Service Instances
Persistence Engines