FIG. 7

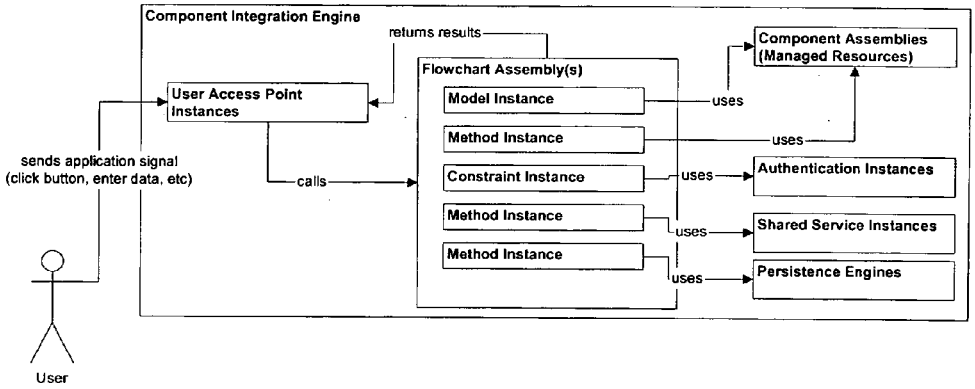
Component Integration Engine
returns results
Component Assemblies (Managed Resources)
Flowchart Assembly(s)
User Access Point Instances
Model Instance
uses
Method Instance
uses
sends application signal (click button, enter data, etc)
calls
Constraint Instance
uses
Authentication Instances
Method Instance
uses
Shared Service Instances
Method Instance
uses
Persistence Engines
User