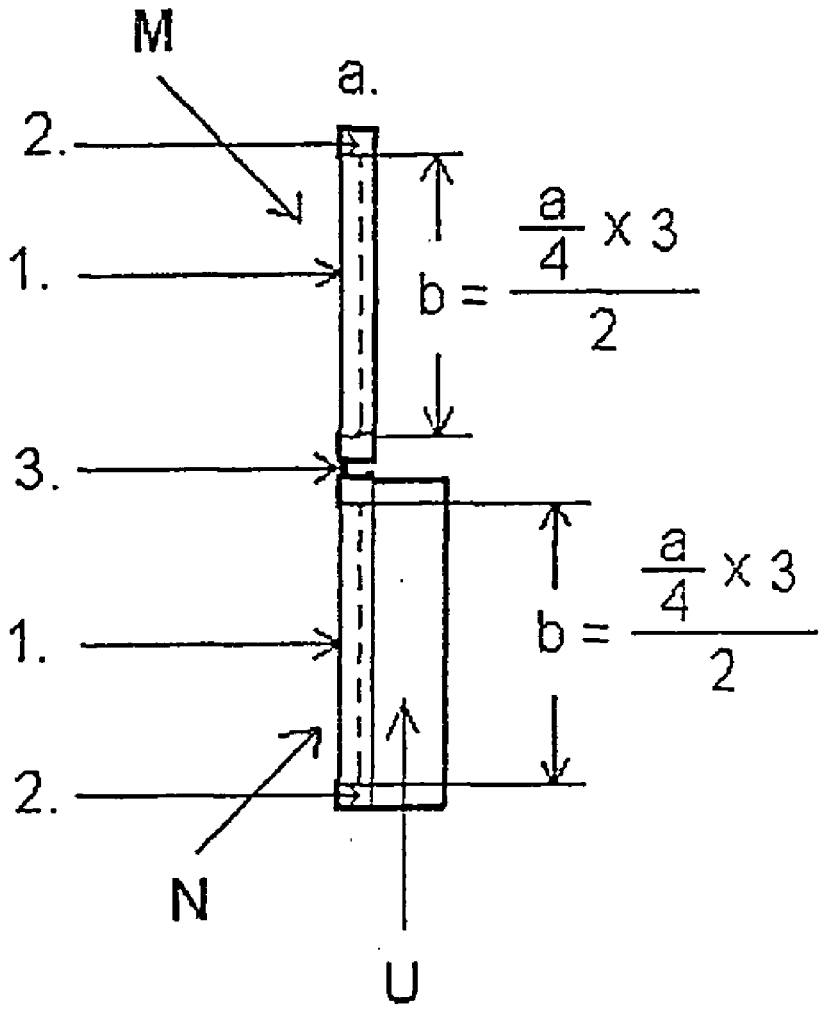Figure 2.