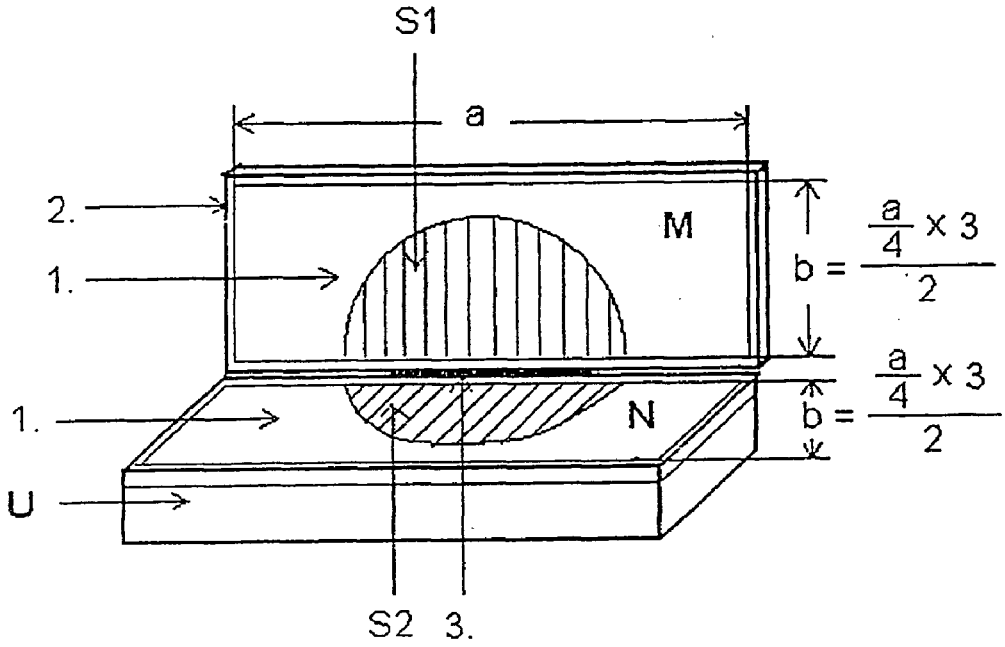Figure 4.