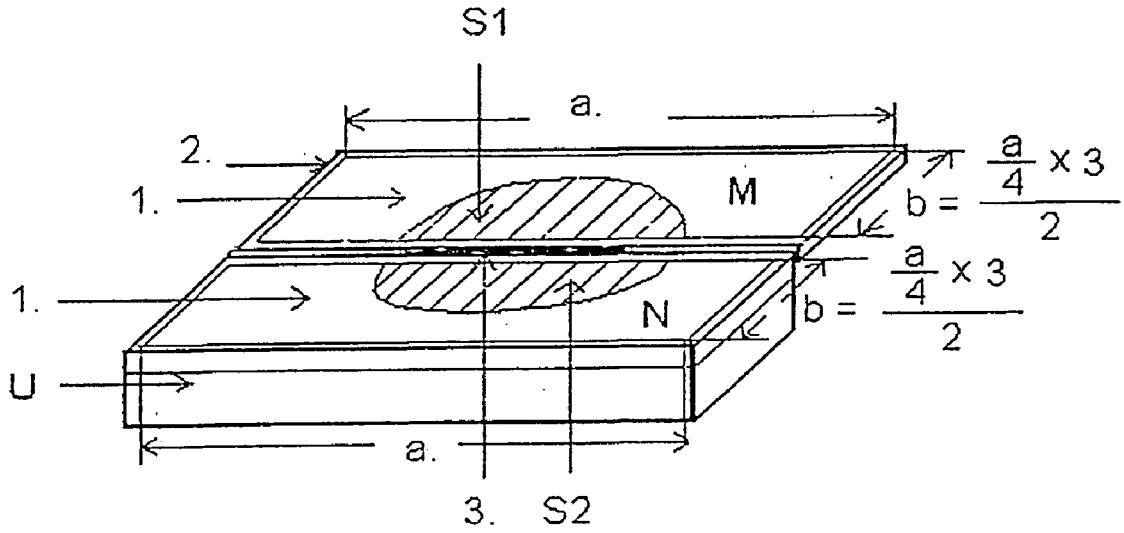Figure 5.