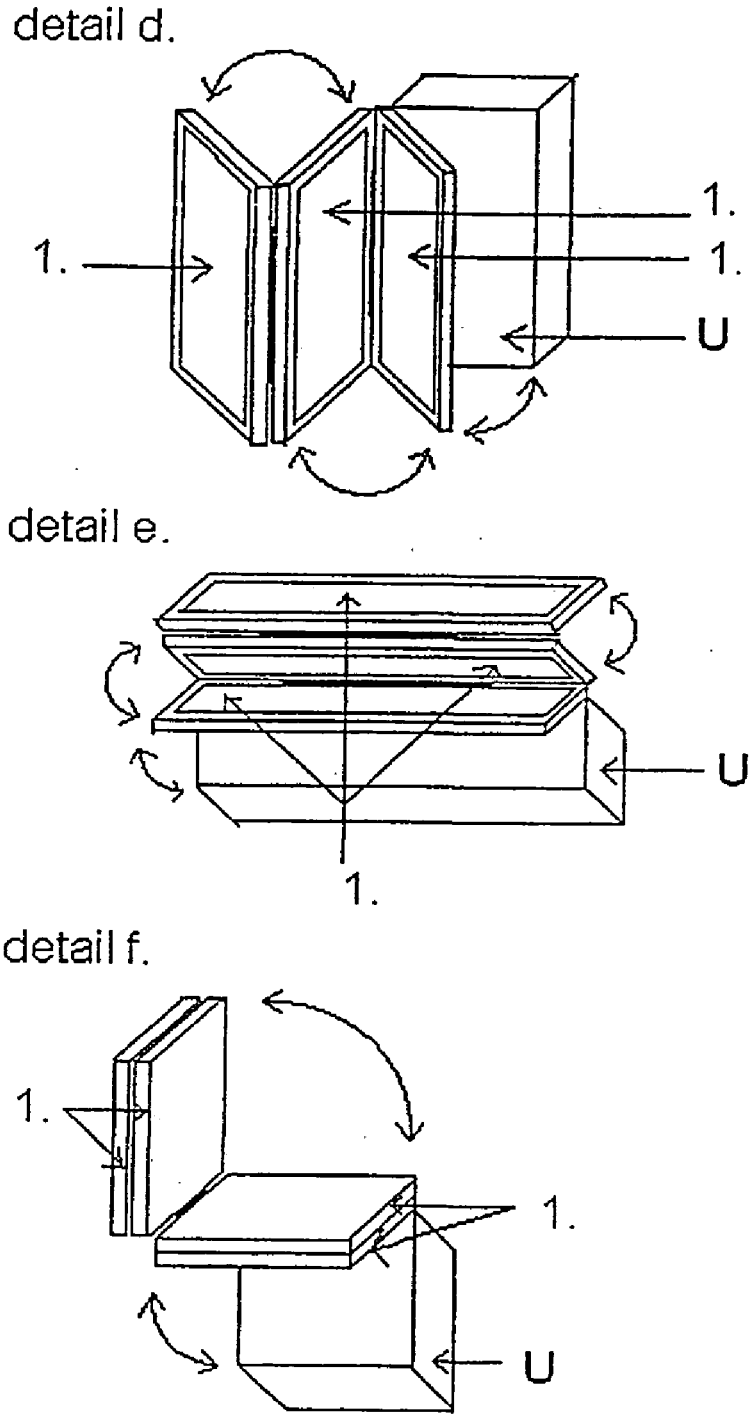Figure 7.