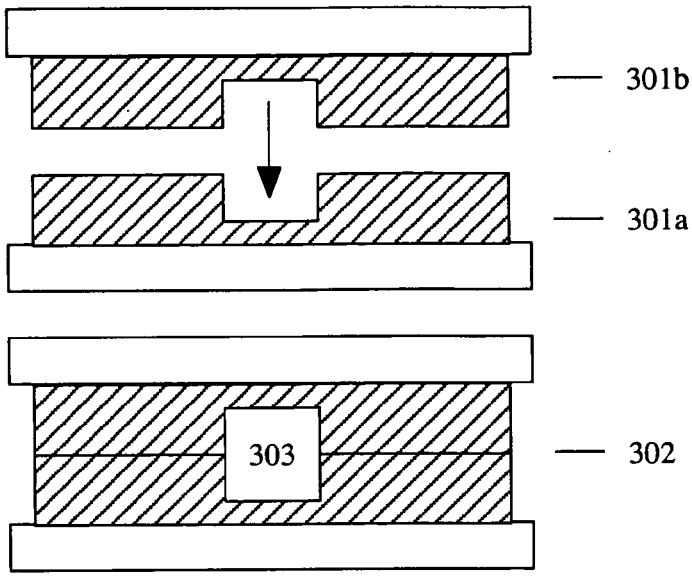

Figure 3.

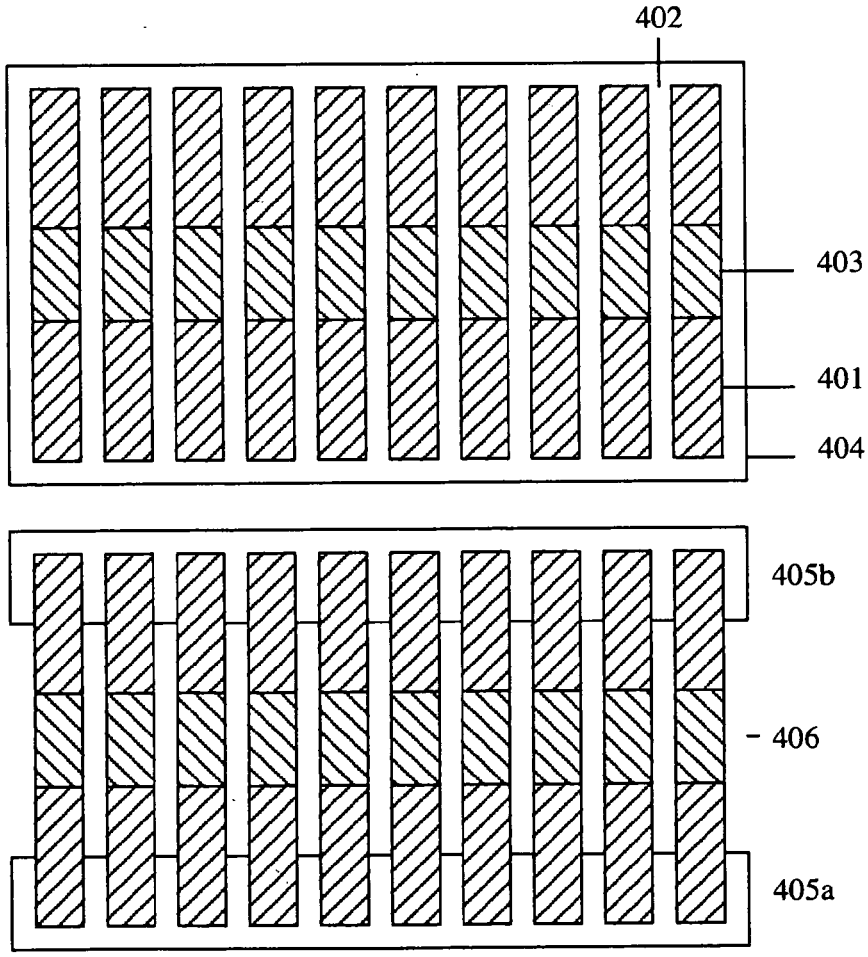

Figure 4.