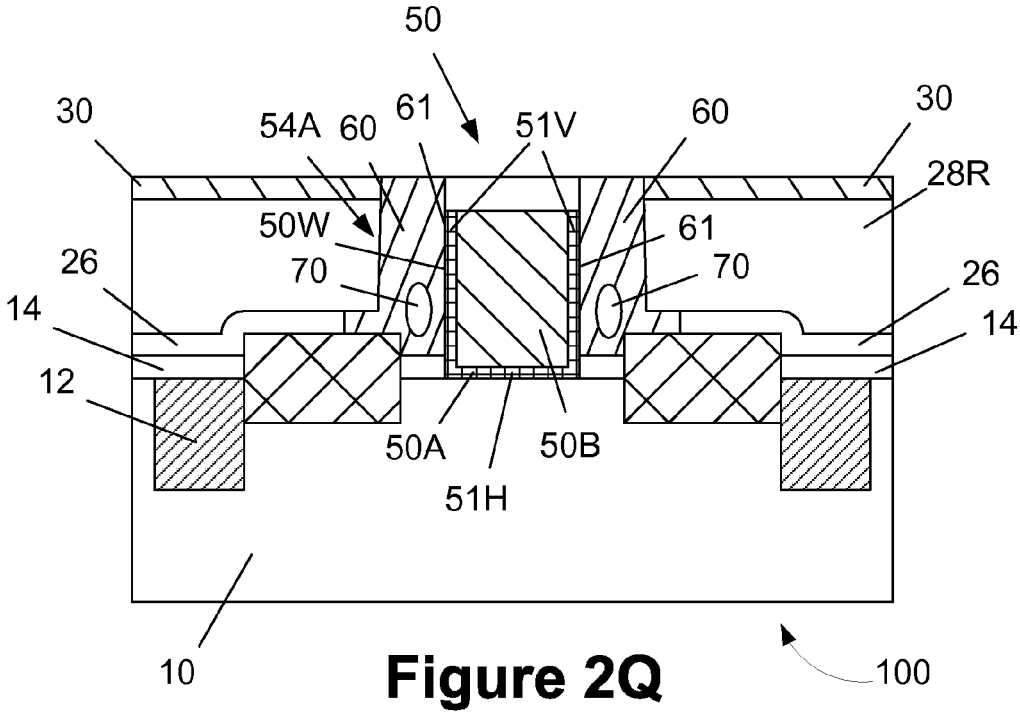
50
30
54A
60
61
51V
60
30
28R
50W
61
26
70
70
26
14
14
12
50A
50B
51H
10
100

Figure 2Q