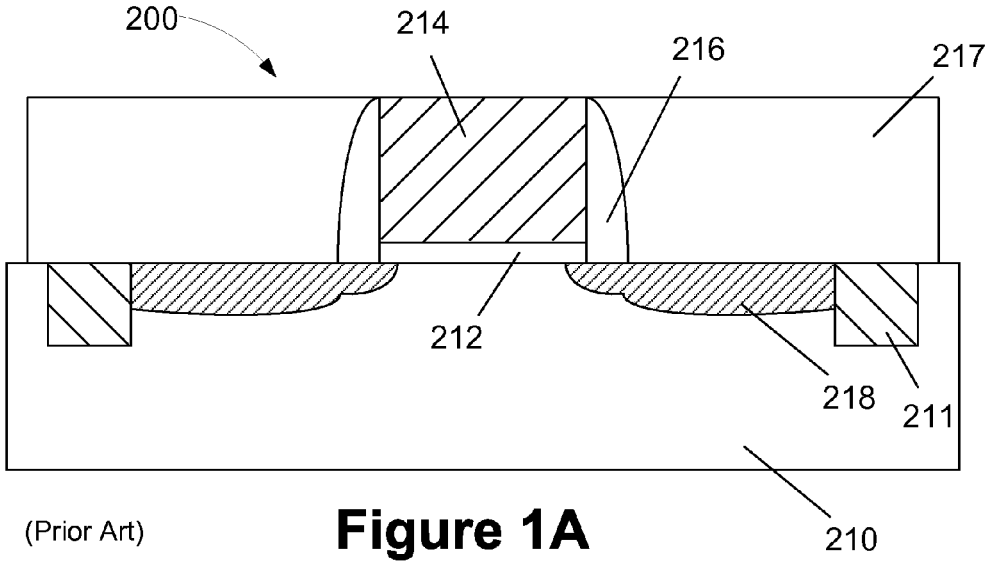

(Prior Art) **Figure 1A**

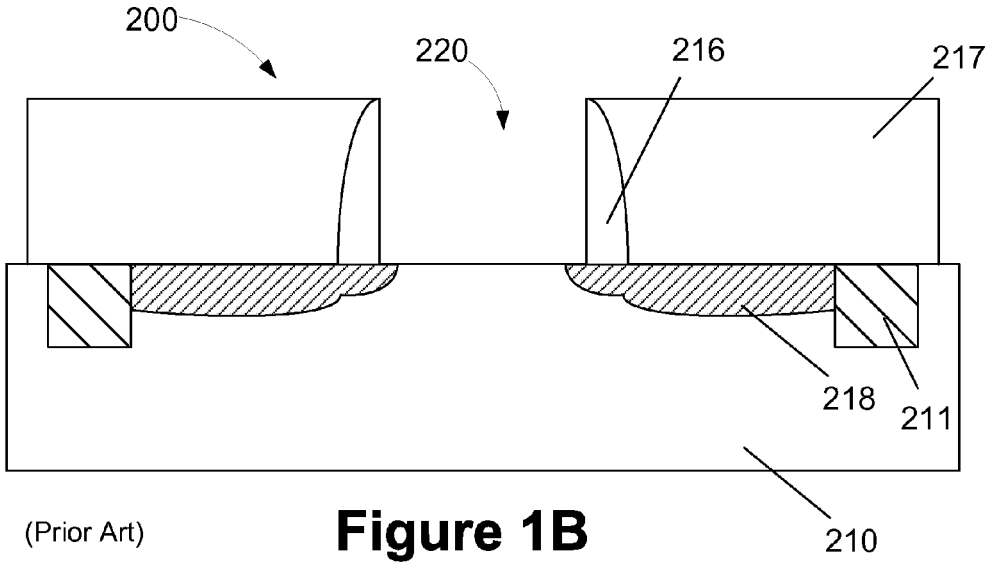

(Prior Art) **Figure 1B**