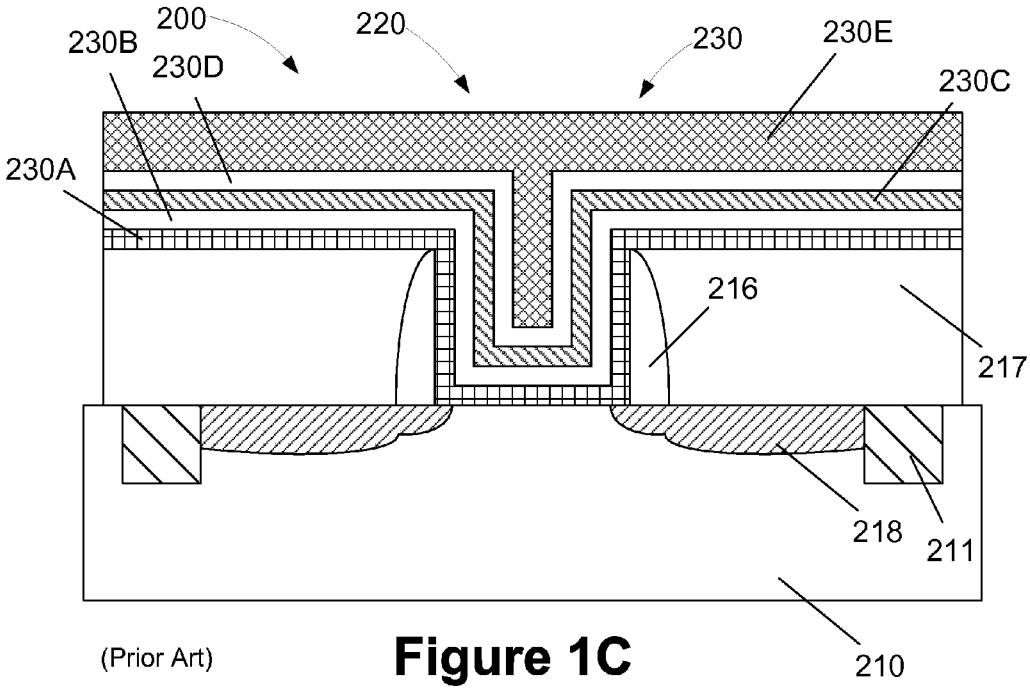

(Prior Art) **Figure 1C**

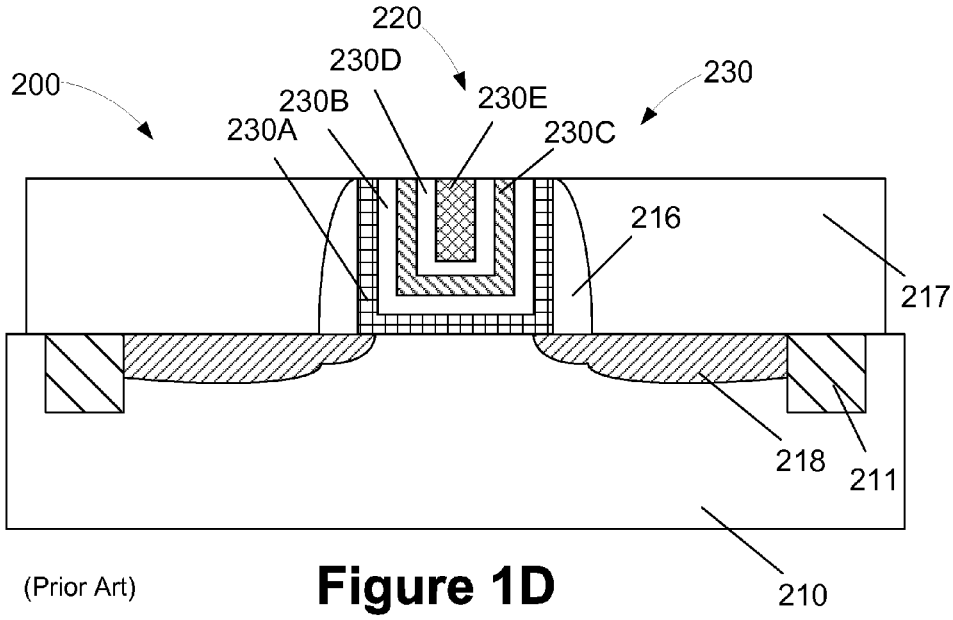

(Prior Art) **Figure 1D**