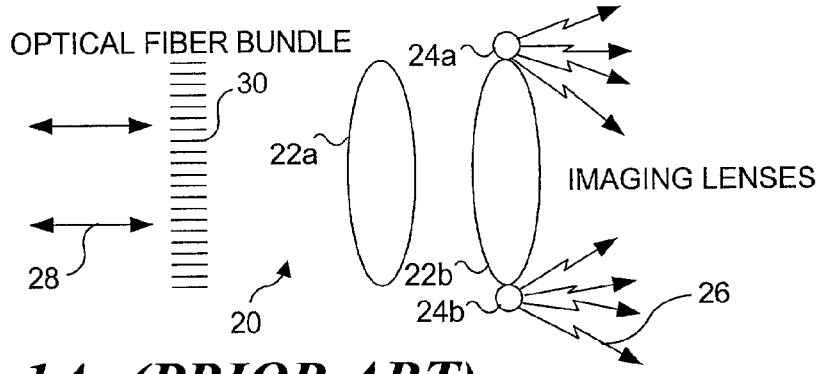


FIG. 1A (PRIOR ART)

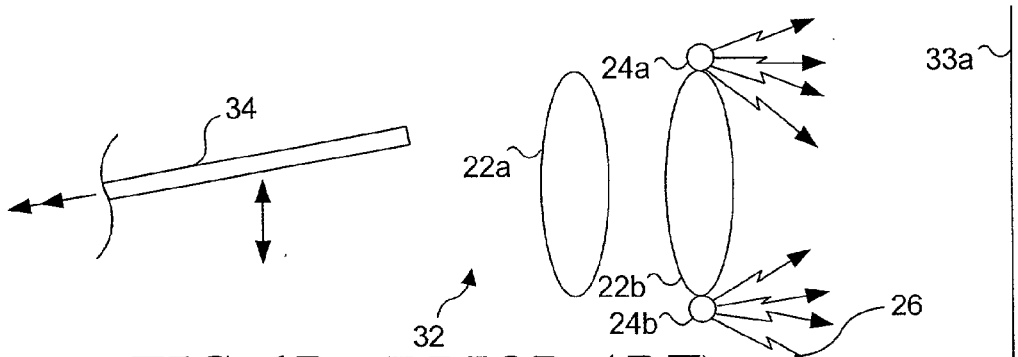


FIG. 1B (PRIOR ART)

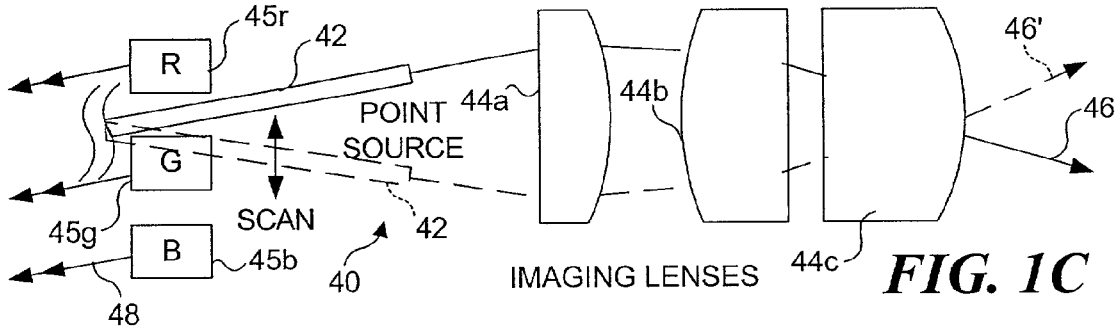


FIG. 1C

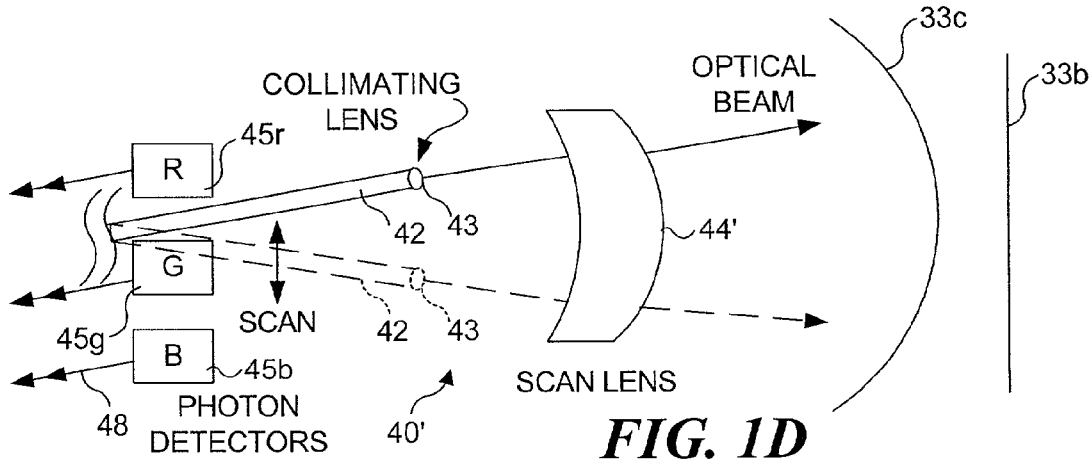


FIG. 1D