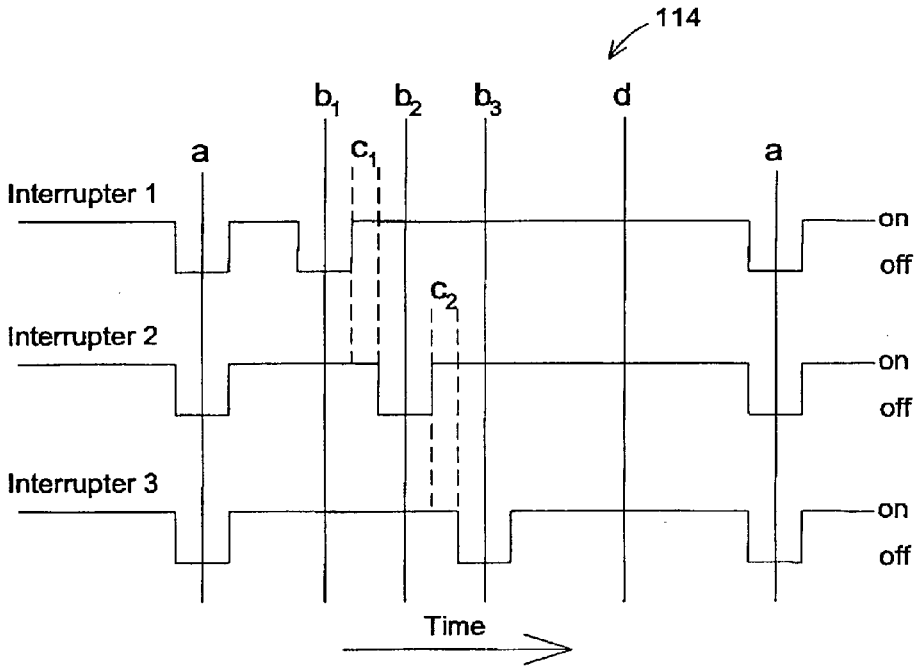
114
a
b_1
c_1
b_2
c_2
b_3
d
a
Interrupter 1
on
off
Interrupter 2
on
off
Interrupter 3
on
off
Time

FIG. 9C