FIG. 27

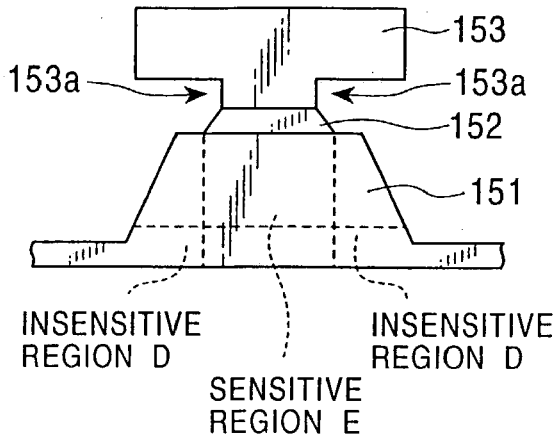
153
153a
153a
152
151
INSENSITIVE
REGION D
INSENSITIVE
REGION D
SENSITIVE
REGION E

FIG. 28

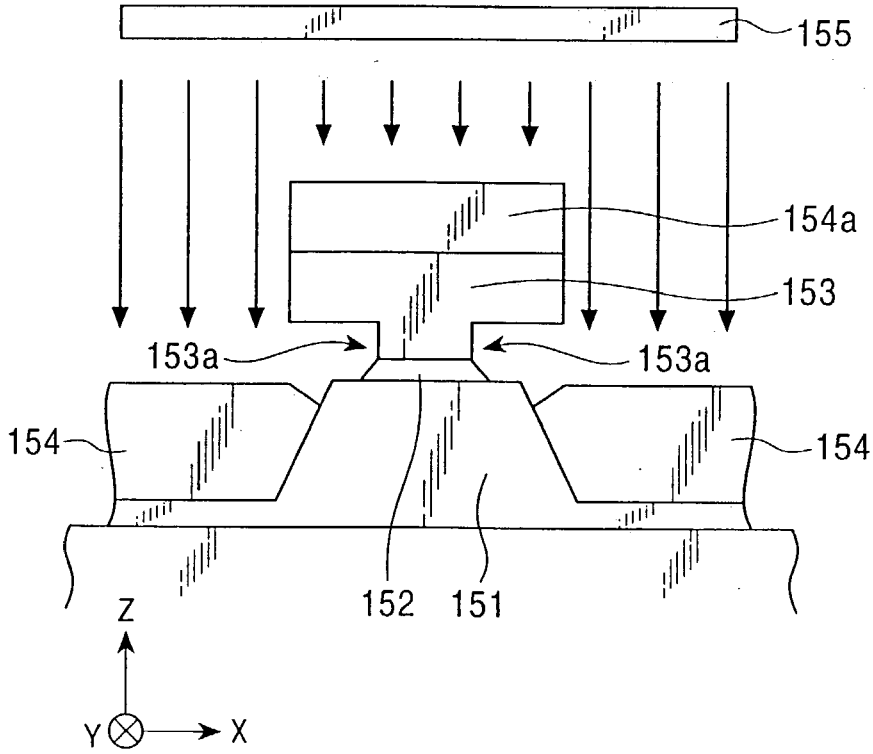
155
154a
153
153a
153a
154
154
152
151
Z
Y
X