FIG. 29

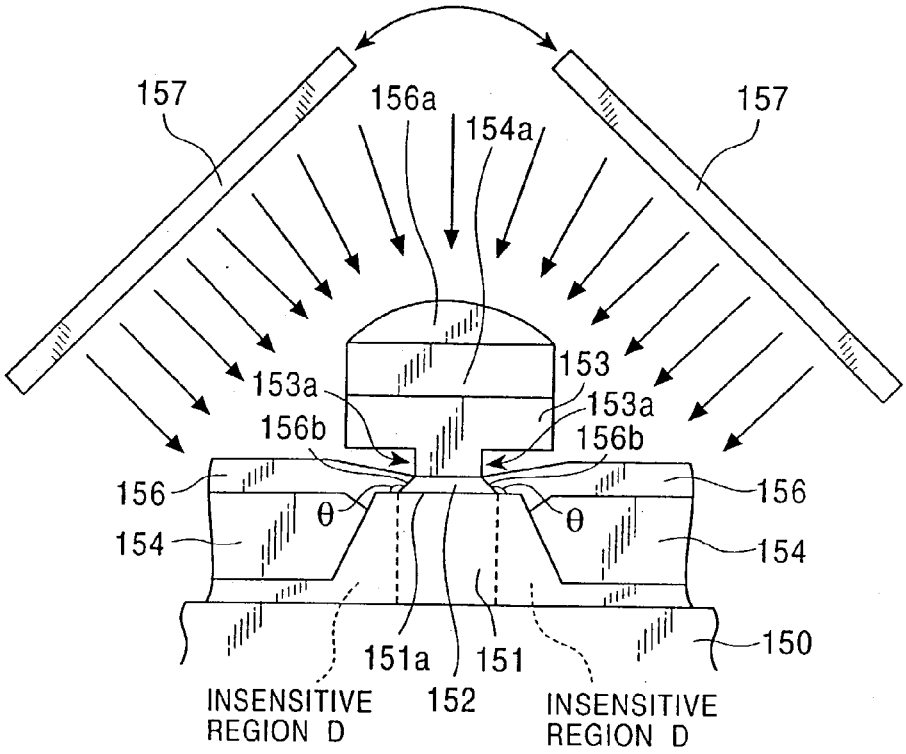
157
156a
154a
157
153
153a
153a
156b
156b
156
156
θ
θ
154
154
150
151a
151
152
INSENSITIVE
REGION D
INSENSITIVE
REGION D