FIG. 8

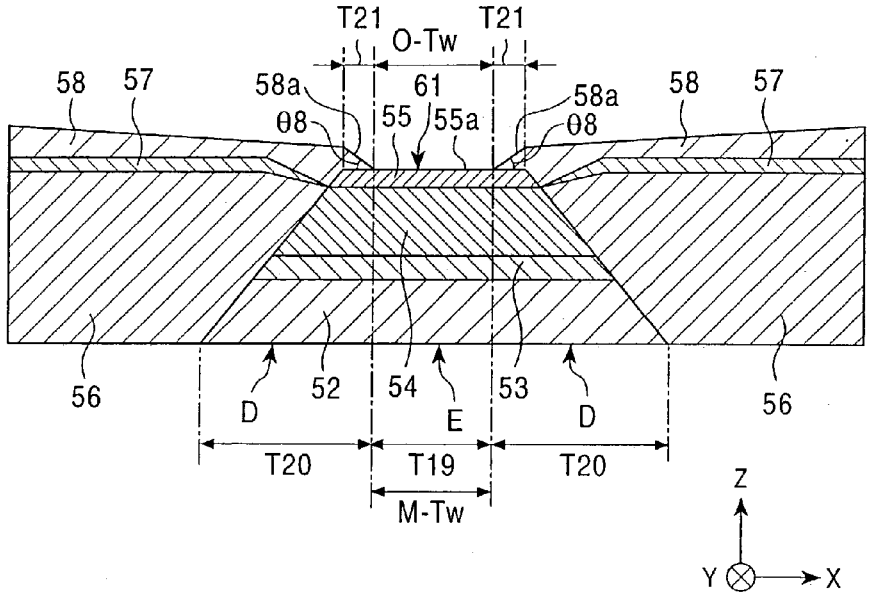
T21
O-Tw
T21
58
57
58a
61
58a
58
57
θ8
55
55a
θ8
56
D
52
54
E
53
D
56
T20
T19
T20
M-Tw
Z
Y
X

FIG. 9

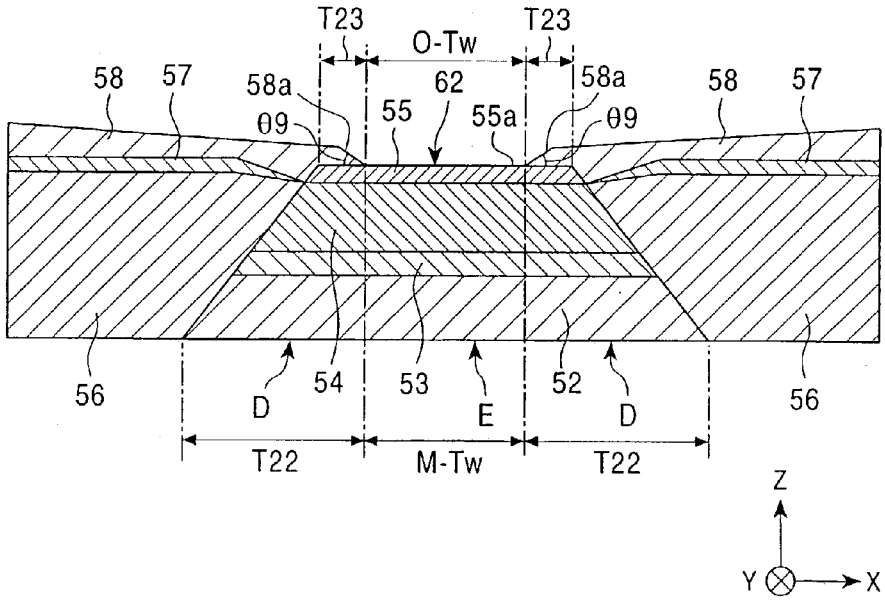
T23
O-Tw
T23
58
57
58a
62
58a
58
57
θ9
55
55a
θ9
56
D
54
53
E
52
D
56
T22
M-Tw
T22
Z
Y
X