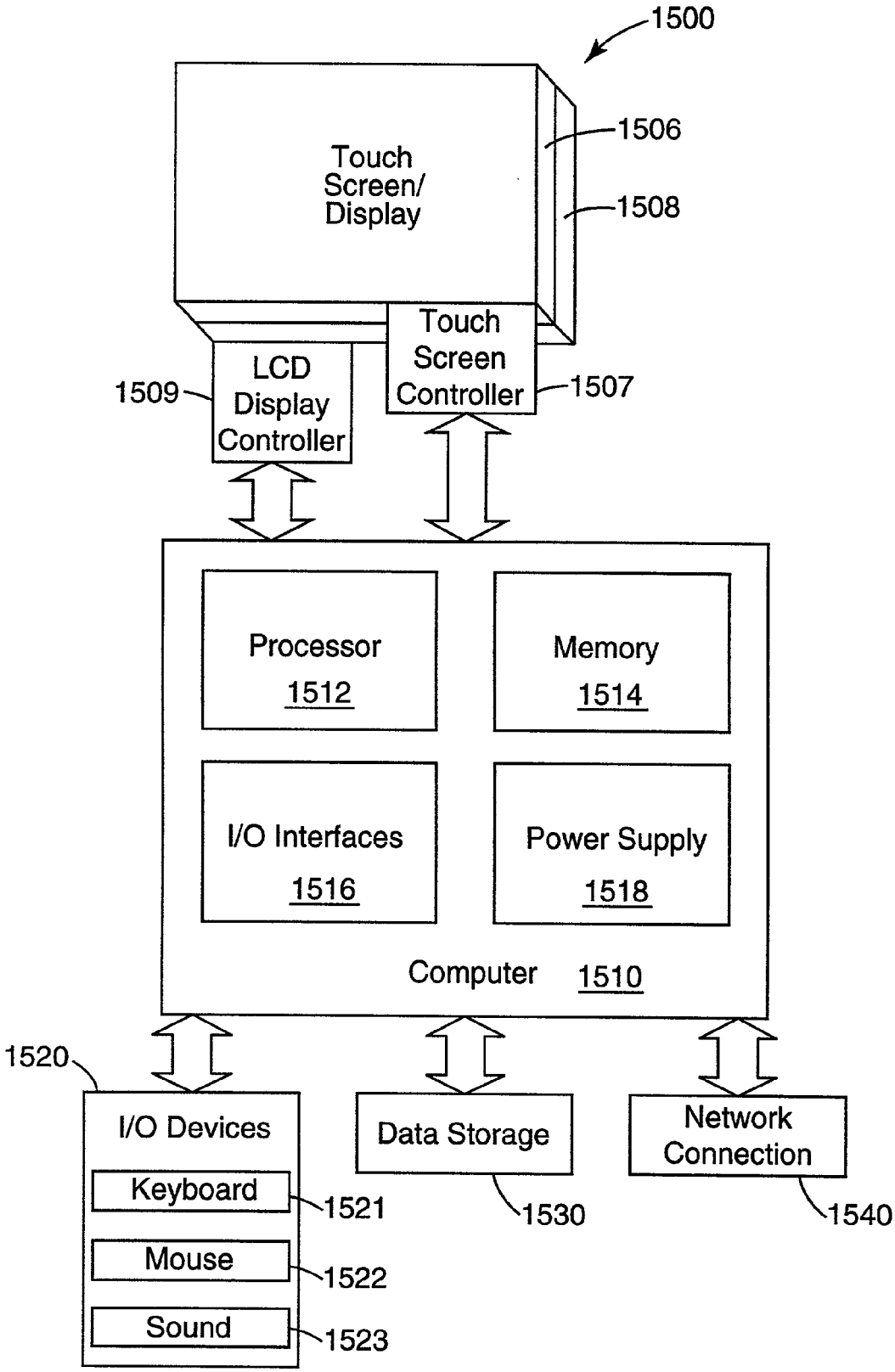
1500
Touch Screen/ Display
1506
1508
Touch Screen Controller
1507
LCD Display Controller
1509
Processor 1512
Memory 1514
I/O Interfaces 1516
Power Supply 1518
Computer 1510
1520
I/O Devices
Keyboard
1521
Mouse
1522
Sound
1523
Data Storage
1530
Network Connection
1540

Fig. 15