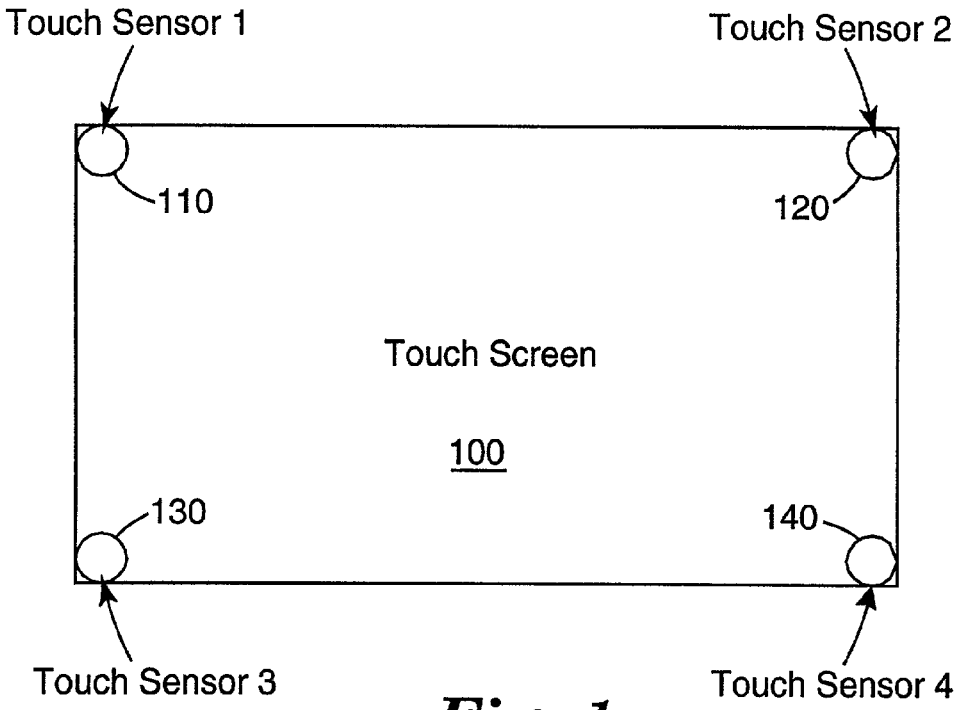
Touch Sensor 1
Touch Sensor 2
110
120
Touch Screen
100
130
140
Touch Sensor 3
Touch Sensor 4

Fig. 1

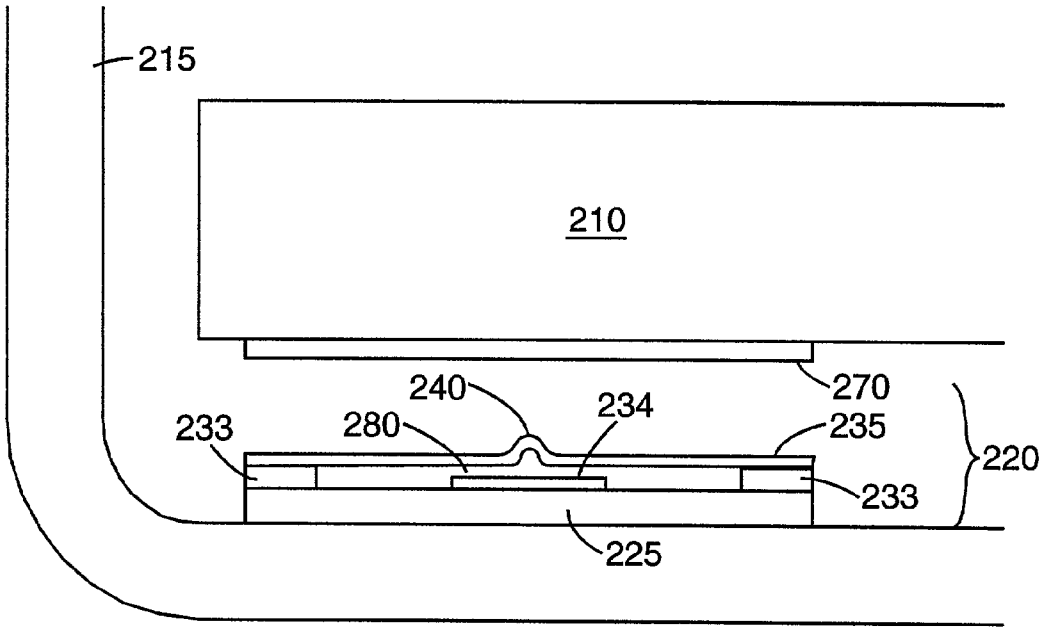
215
210
270
240
234
233
280
235
220
233
225

Fig. 2