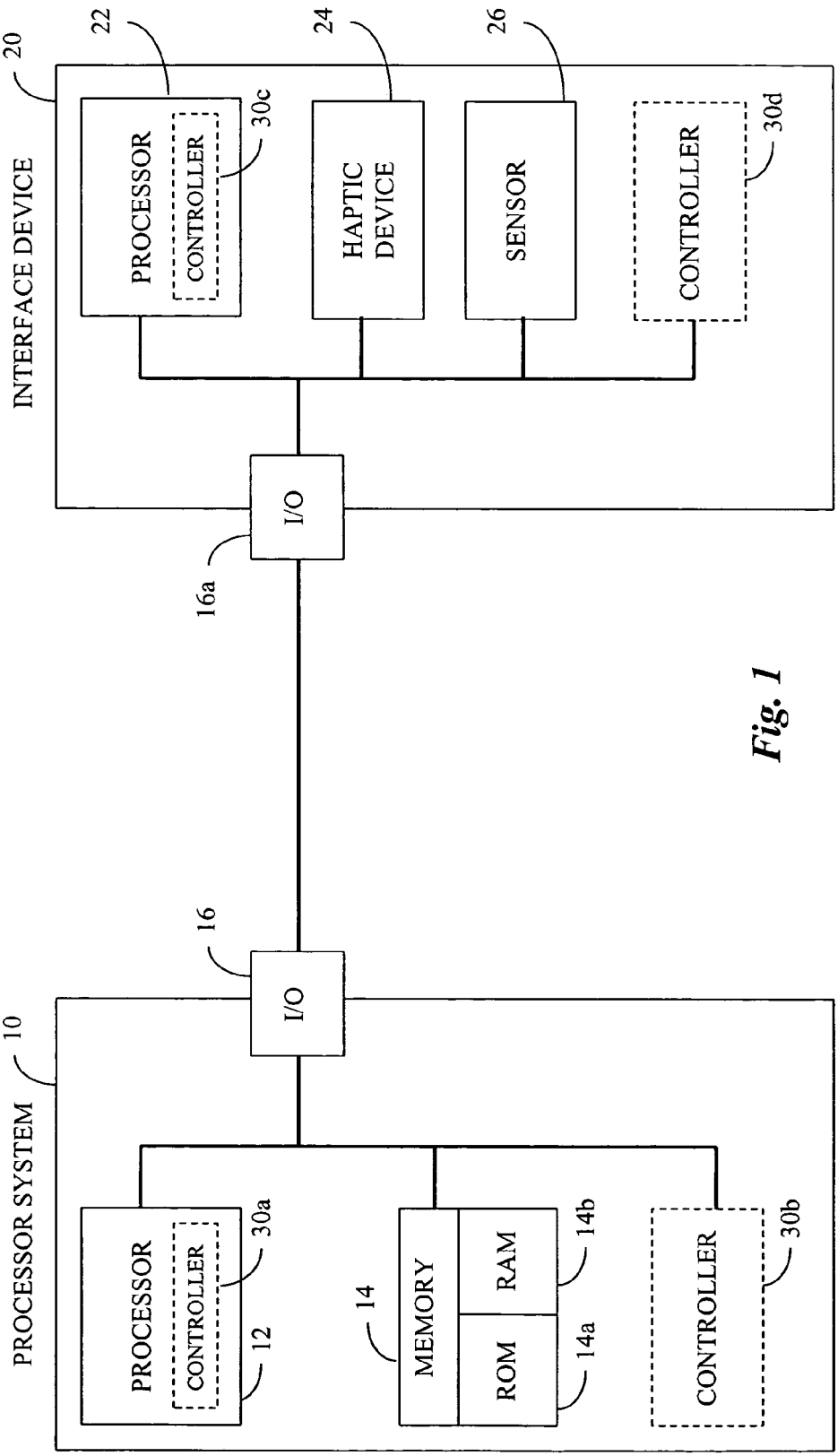
INTERFACE DEVICE
20
22
PROCESSOR
CONTROLLER
30c
24
HAPTIC DEVICE
26
SENSOR
CONTROLLER
30d
I/O
16a
16
I/O
PROCESSOR SYSTEM
10
PROCESSOR
CONTROLLER
30a
12
14
MEMORY
RAM
14b
ROM
14a
CONTROLLER
30b

Fig. 1