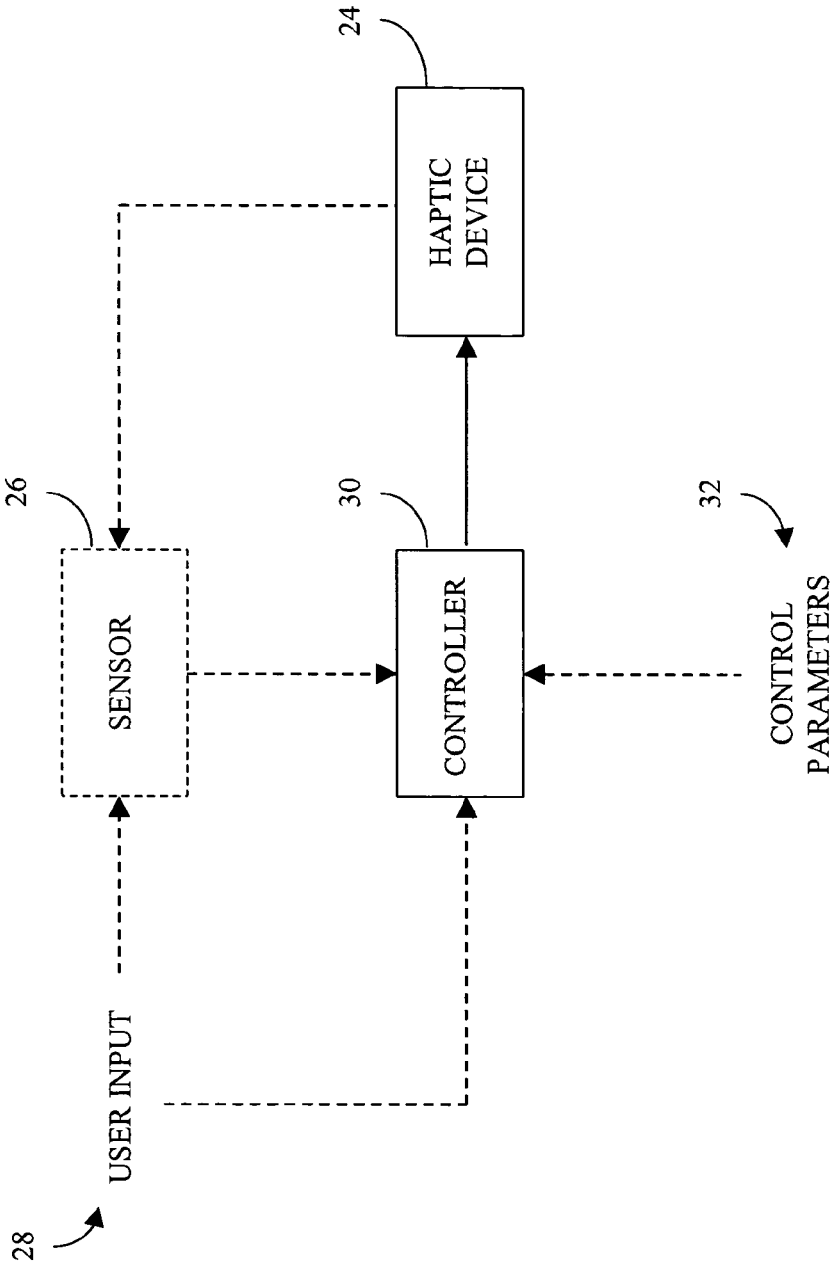
24
HAPTIC DEVICE
26
SENSOR
30
CONTROLLER
32
CONTROL PARAMETERS
28
USER INPUT

Fig. 2A