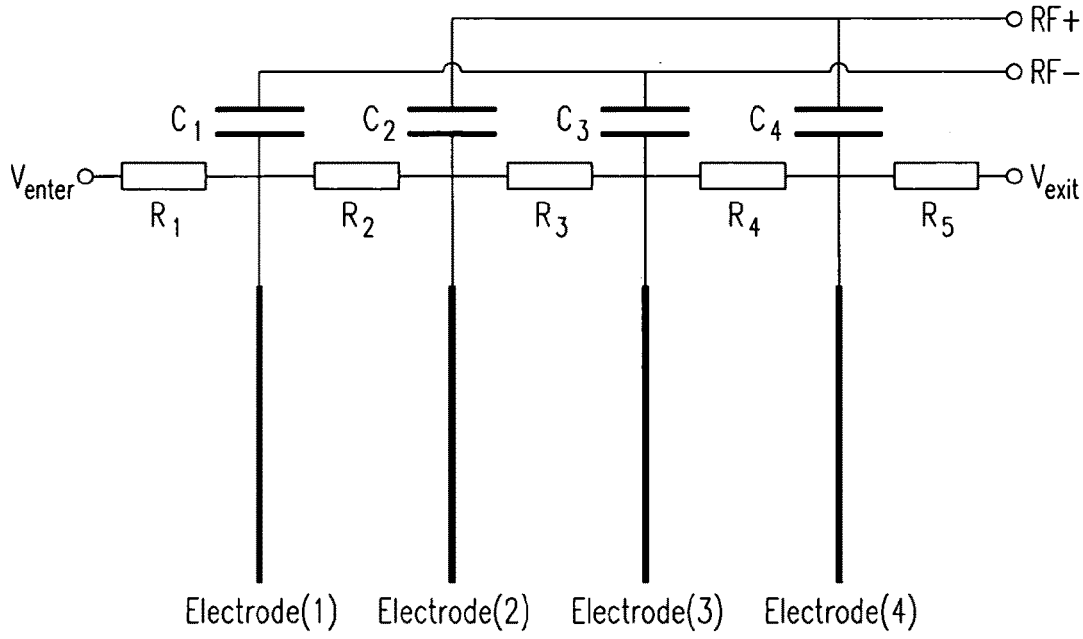
RF+
RF−
C1
C2
C3
C4
Venter
R1
R2
R3
R4
R5
Vexit
Electrode(1)
Electrode(2)
Electrode(3)
Electrode(4)

Fig. 4