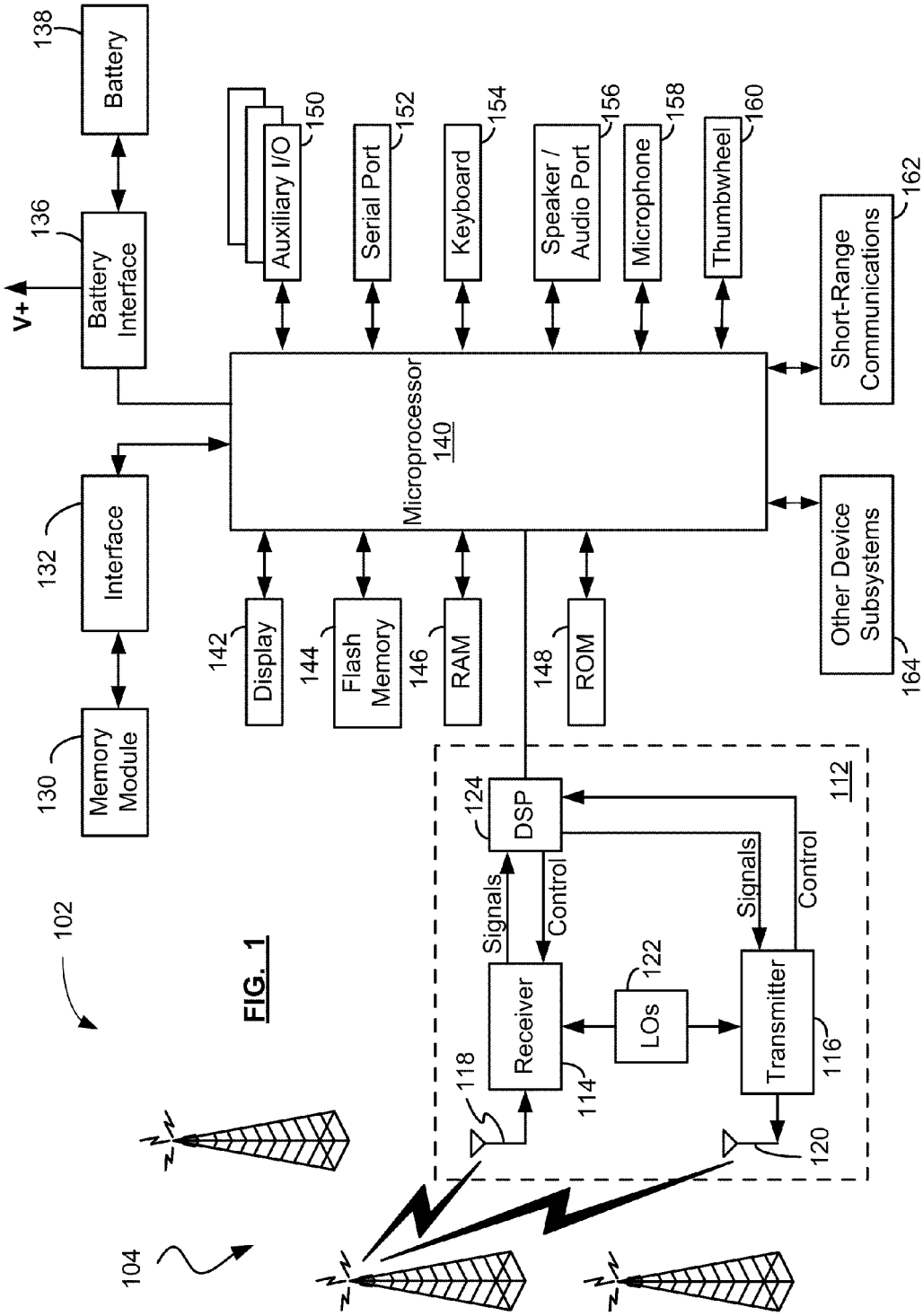
138
Battery
136
Battery Interface
V+
132
Interface
130
Memory Module
102
Auxiliary I/O
150
Serial Port
152
Keyboard
154
Speaker / Audio Port
156
Microphone
158
Thumbwheel
160
Short-Range Communications
162
Microprocessor
140
Other Device Subsystems
164
142
Display
144
Flash Memory
146
RAM
148
ROM
124
DSP
Signals
Control
Signals
Control
112
118
Receiver
114
122
LOs
Transmitter
116
120
104

FIG. 1