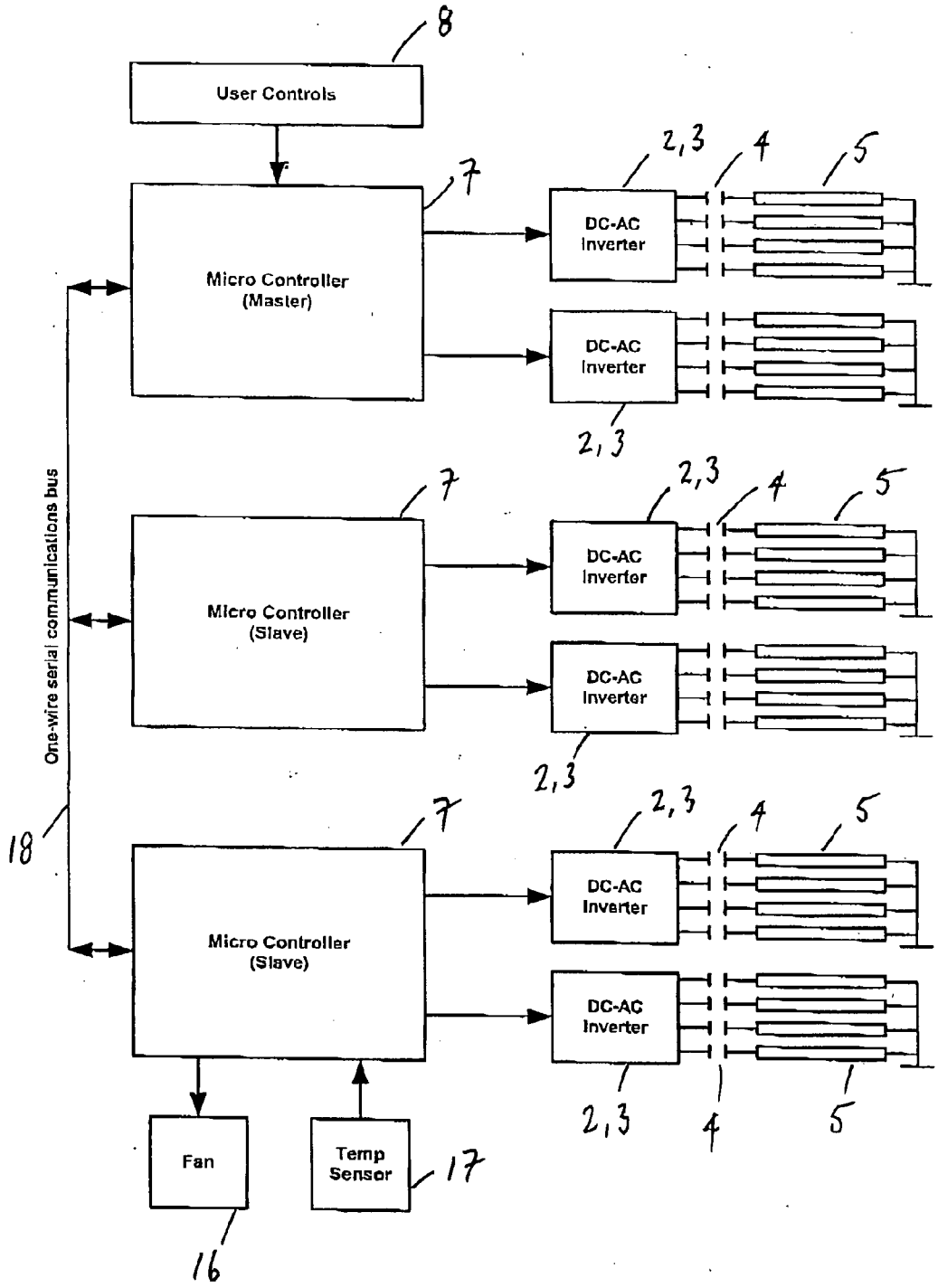
8
User Controls
7
Micro Controller
(Master)
2,3
4
5
DC-AC
Inverter
DC-AC
Inverter
2,3
7
Micro Controller
(Slave)
2,3
4
5
DC-AC
Inverter
DC-AC
Inverter
2,3
One-wire serial communications bus
18
7
Micro Controller
(Slave)
2,3
4
5
DC-AC
Inverter
DC-AC
Inverter
2,3
4
5
Fan
Temp
Sensor
17
16

FIGURE 3