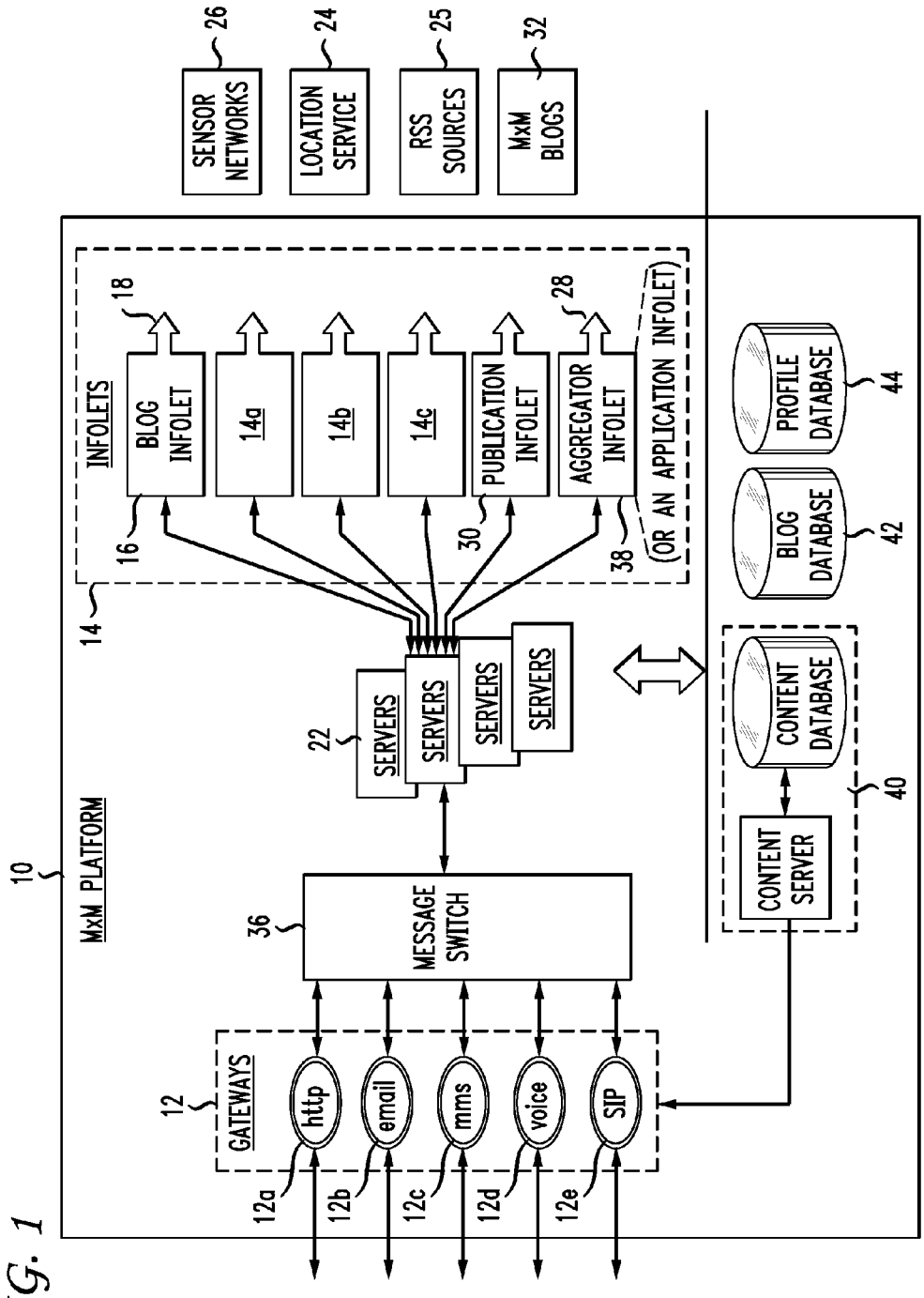
SENSOR NETWORKS
26
LOCATION SERVICE
24
RSS SOURCES
25
MxM BLOGS
32
MxM PLATFORM
10
INFOLETS
14
BLOG INFOLET
16
18
14a
14b
14c
PUBLICATION INFOLET
30
AGGREGATOR INFOLET
28
(OR AN APPLICATION INFOLET)
38
SERVERS
22
MESSAGE SWITCH
36
GATEWAYS
12
http
email
mms
voice
SIP
12a
12b
12c
12d
12e
CONTENT SERVER
CONTENT DATABASE
40
BLOG DATABASE
42
PROFILE DATABASE
44

FIG. 1