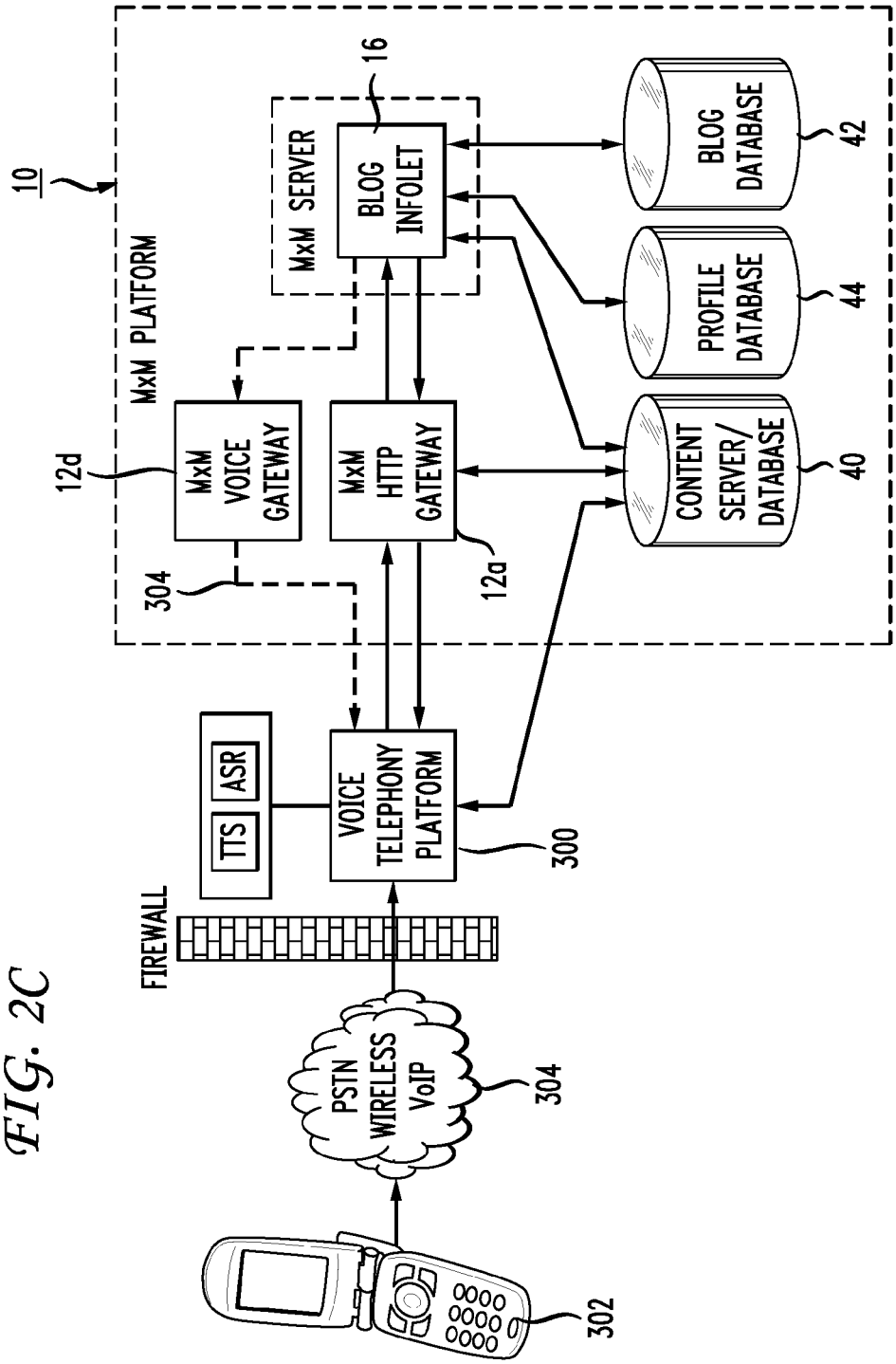
10
MxM PLATFORM
MxM SERVER
16
BLOG INFOLET
BLOG DATABASE
42
PROFILE DATABASE
44
CONTENT SERVER/ DATABASE
40
12d
MxM VOICE GATEWAY
MxM HTTP GATEWAY
12a
304
TTS
ASR
VOICE TELEPHONY PLATFORM
300
FIREWALL
PSTN WIRELESS VoIP
304
302

FIG. 2C