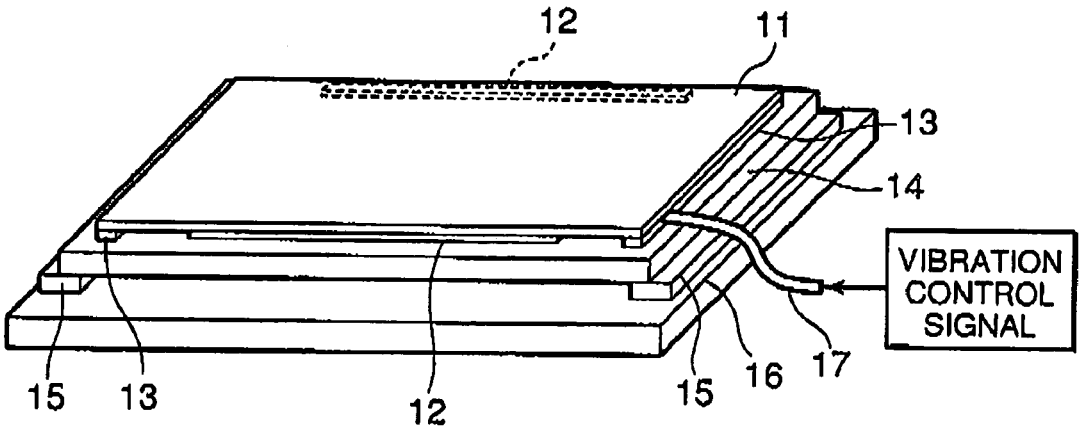
12
11
13
14
VIBRATION CONTROL SIGNAL
15
13
12
15
16
17

FIG. 1

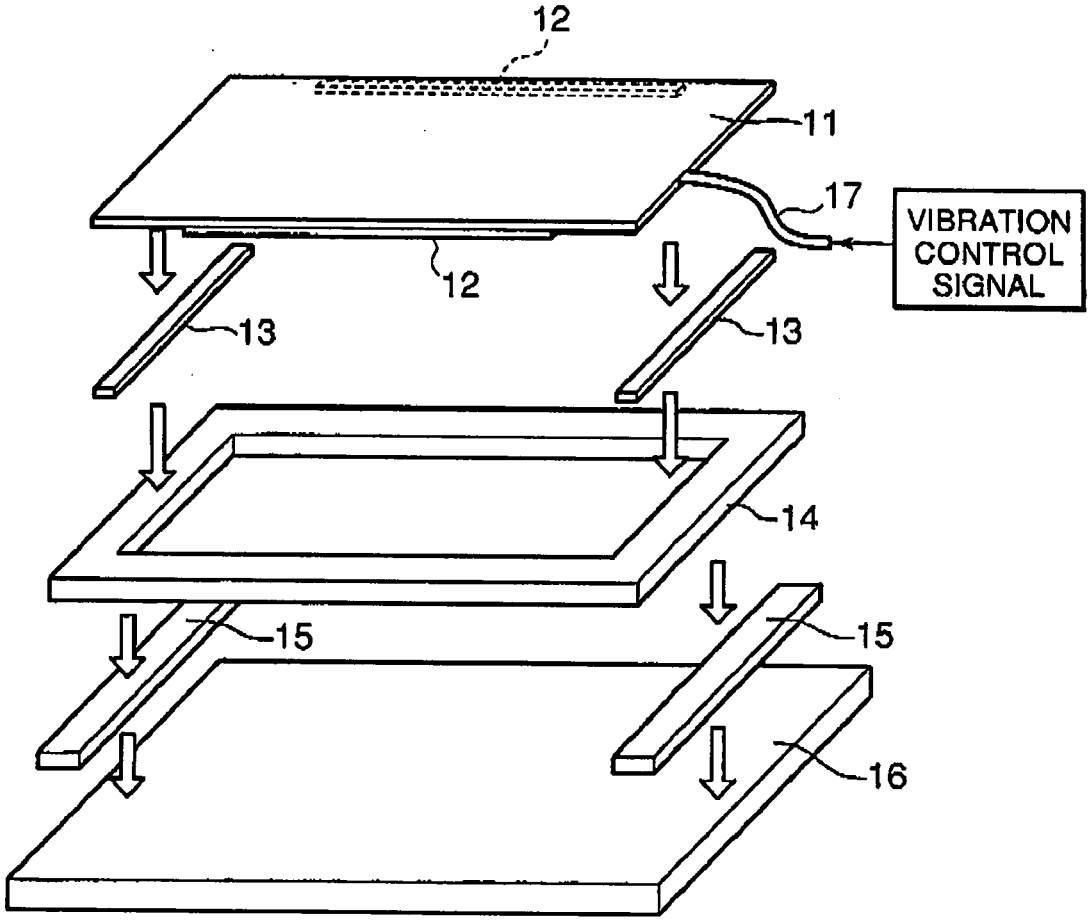
12
11
17
VIBRATION CONTROL SIGNAL
12
13
13
14
15
15
16

FIG. 2