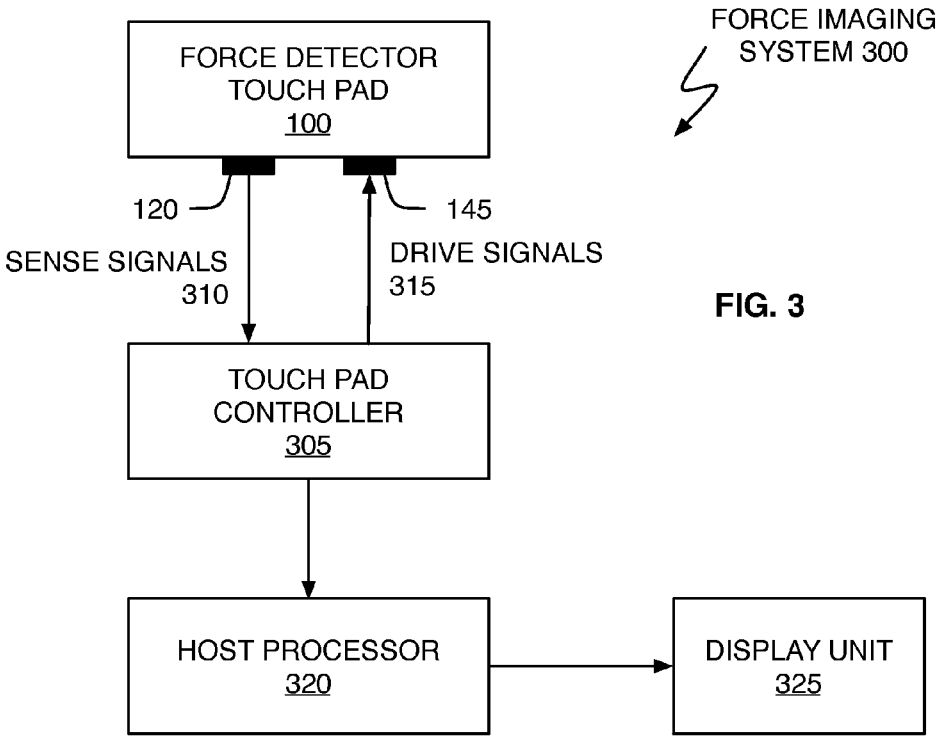
FORCE IMAGING SYSTEM 300
FORCE DETECTOR TOUCH PAD 100
120
145
SENSE SIGNALS 310
DRIVE SIGNALS 315
TOUCH PAD CONTROLLER 305
HOST PROCESSOR 320
DISPLAY UNIT 325

FIG. 3

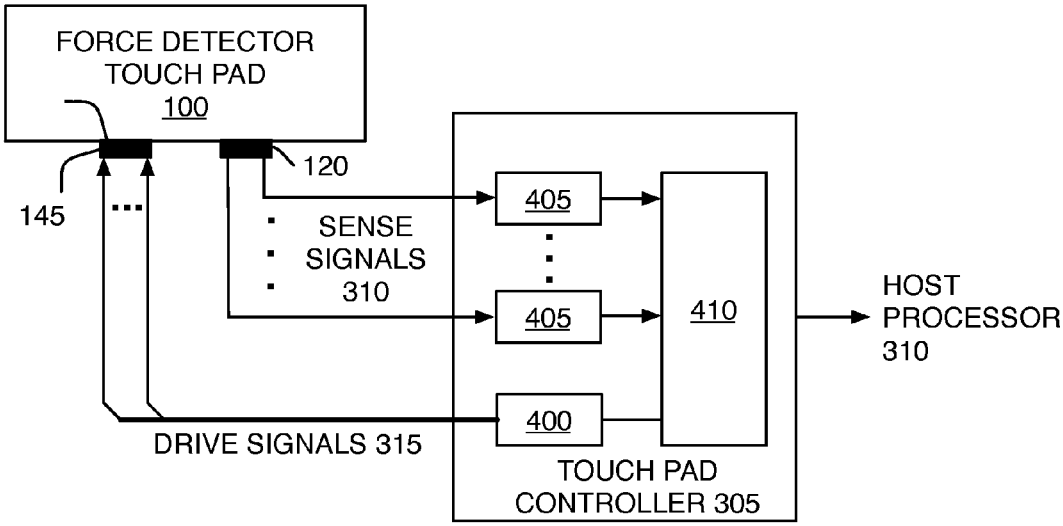
FORCE DETECTOR TOUCH PAD 100
145
120
SENSE SIGNALS 310
405
405
410
400
HOST PROCESSOR 310
DRIVE SIGNALS 315
TOUCH PAD CONTROLLER 305

FIG. 4