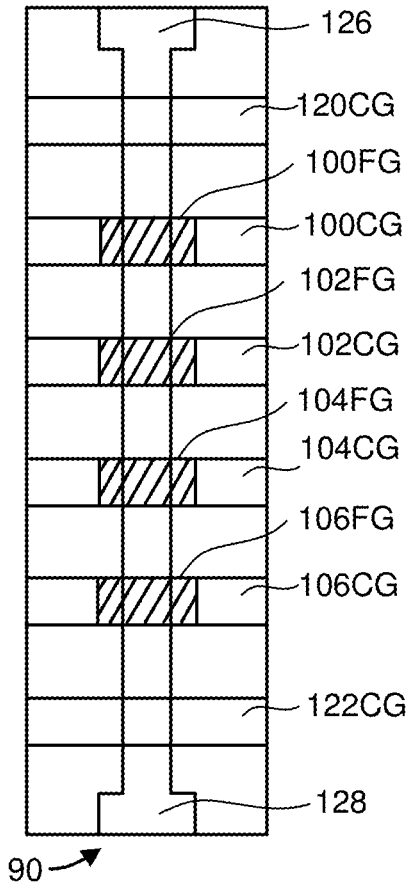
126
120CG
100FG
100CG
102FG
102CG
104FG
104CG
106FG
106CG
122CG
128
90

FIG. 1

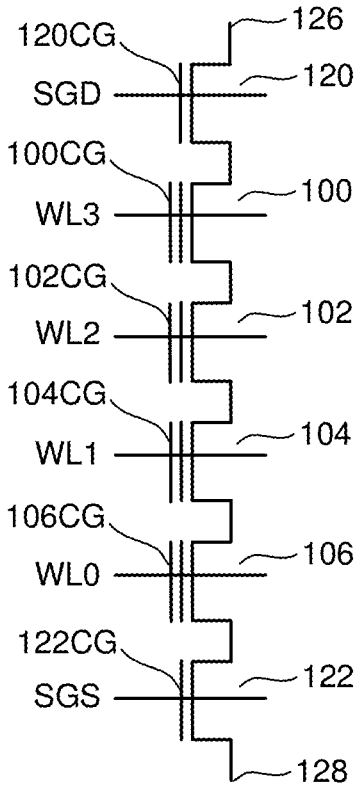
126
120CG
SGD
120
100CG
WL3
100
102CG
WL2
102
104CG
WL1
104
106CG
WL0
106
122CG
SGS
122
128

FIG. 2