FIG. 13

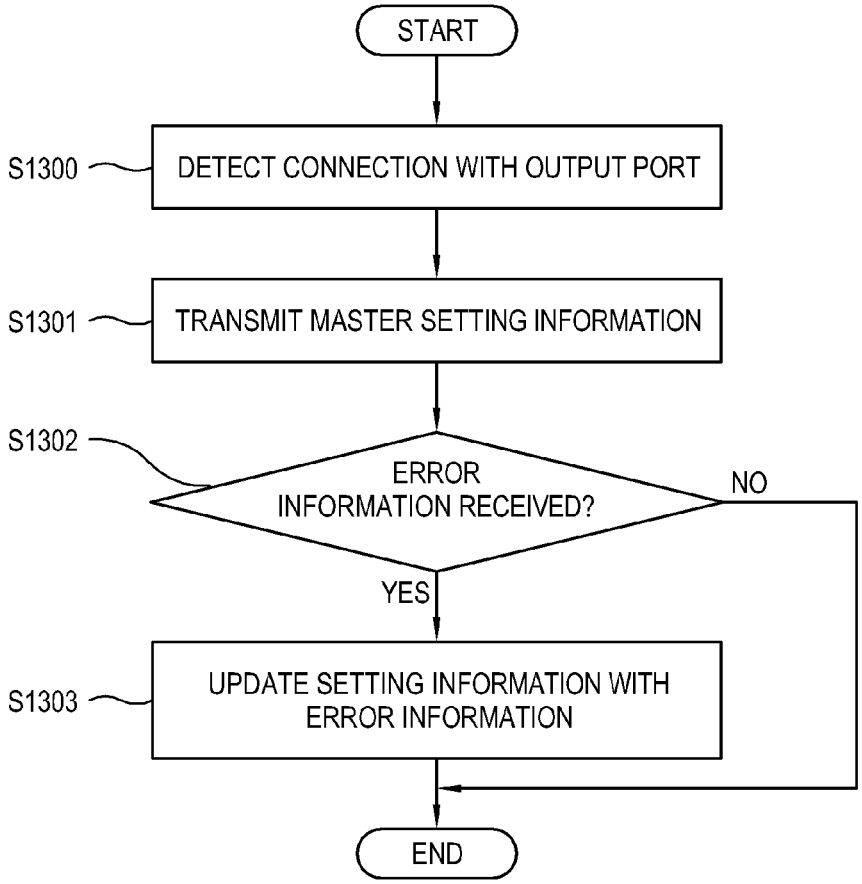
START
S1300
DETECT CONNECTION WITH OUTPUT PORT
S1301
TRANSMIT MASTER SETTING INFORMATION
S1302
ERROR INFORMATION RECEIVED?
NO
YES
S1303
UPDATE SETTING INFORMATION WITH ERROR INFORMATION
END