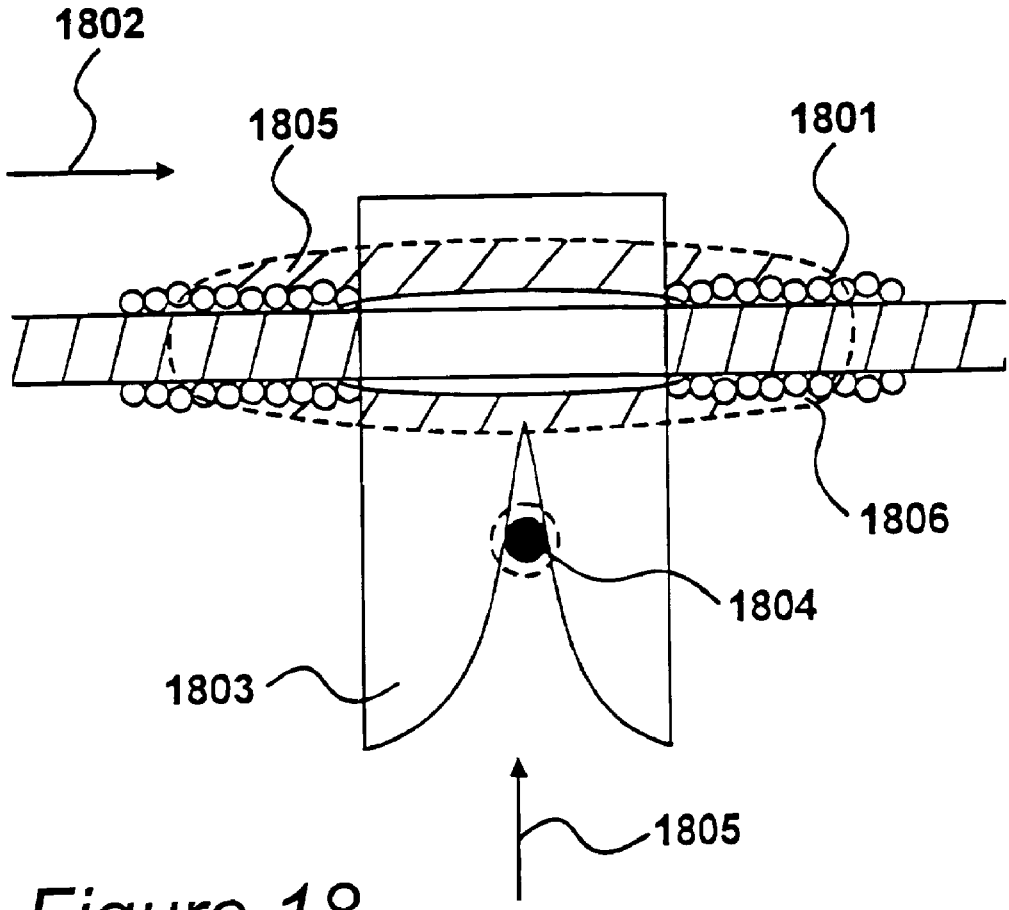

Figure 18

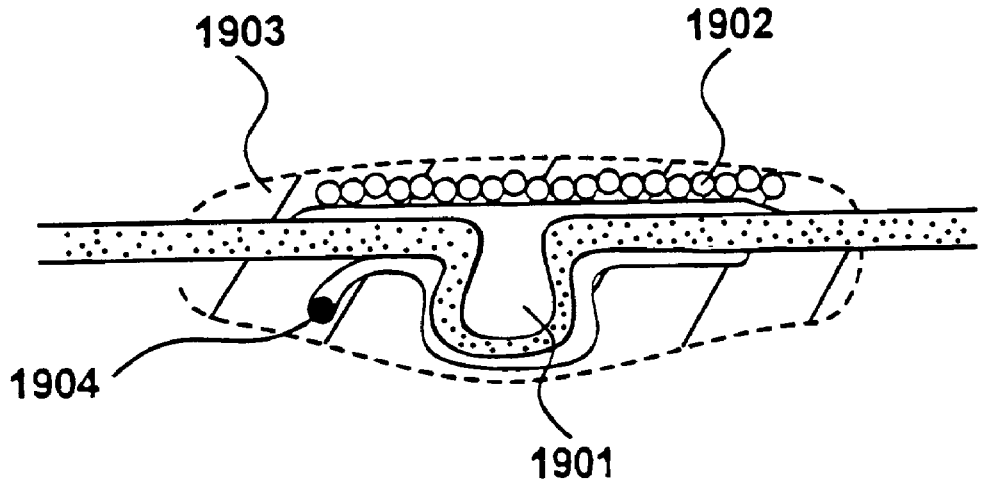

Figure 19