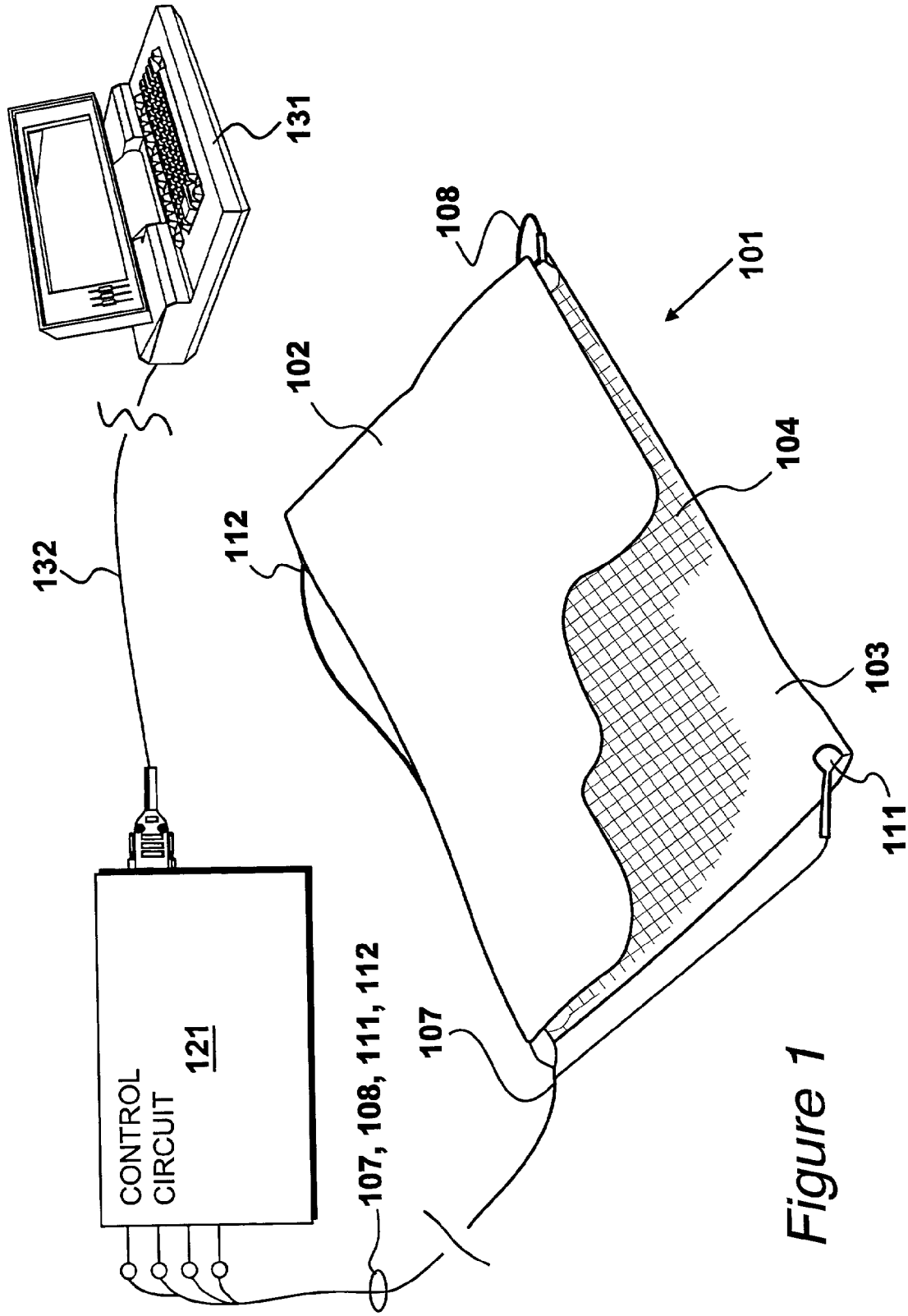
131
132
CONTROL
CIRCUIT
121
107, 108, 111, 112
107
112
102
108
101
104
103
111

Figure 1