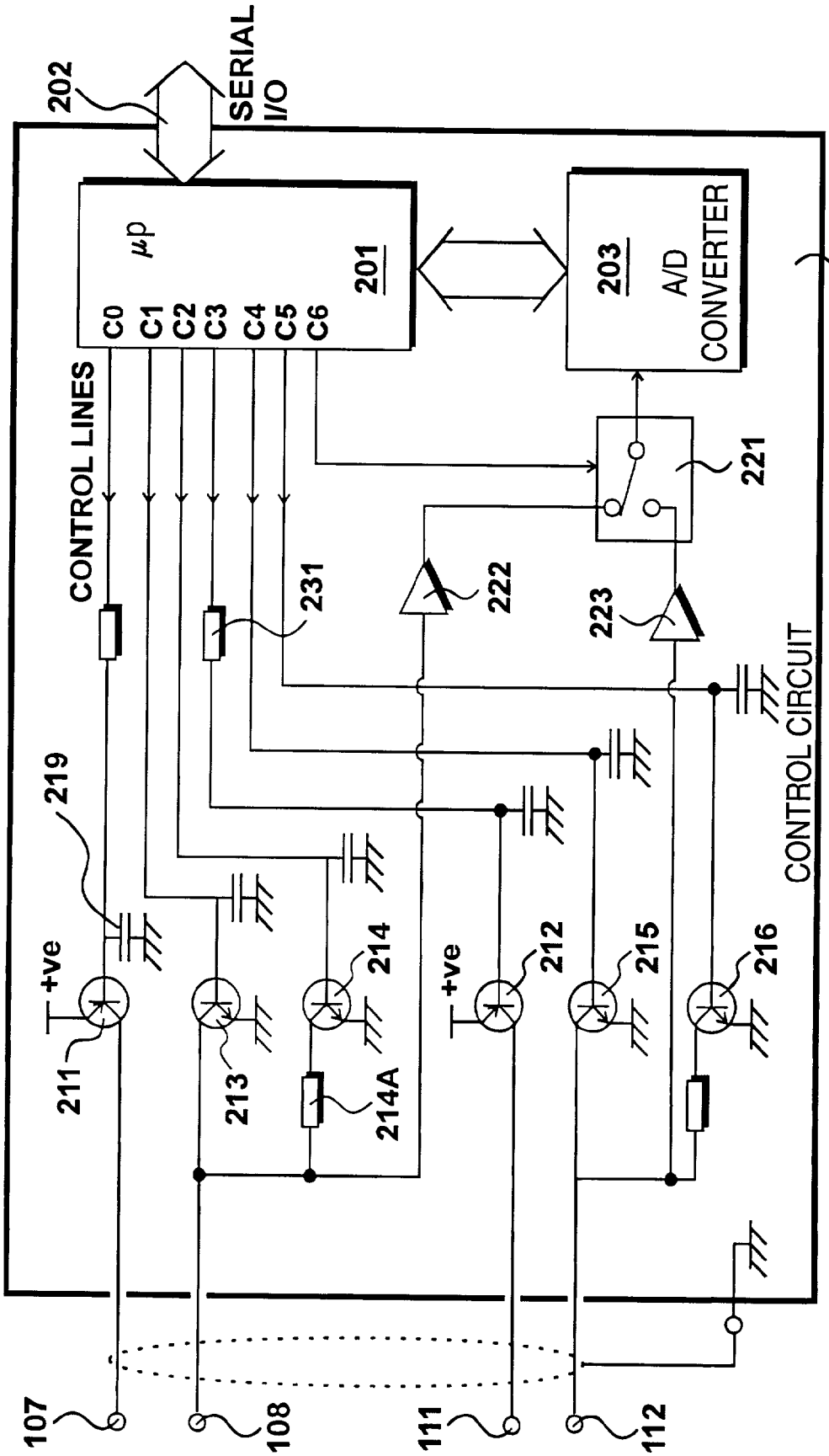
202
SERIAL I/O
μp
201
C0
C1
C2
C3
C4
C5
C6
203
A/D CONVERTER
121
CONTROL LINES
221
231
222
223
CONTROL CIRCUIT
219
+ve
211
213
214
214A
+ve
212
215
216
107
108
111
112

Figure 2