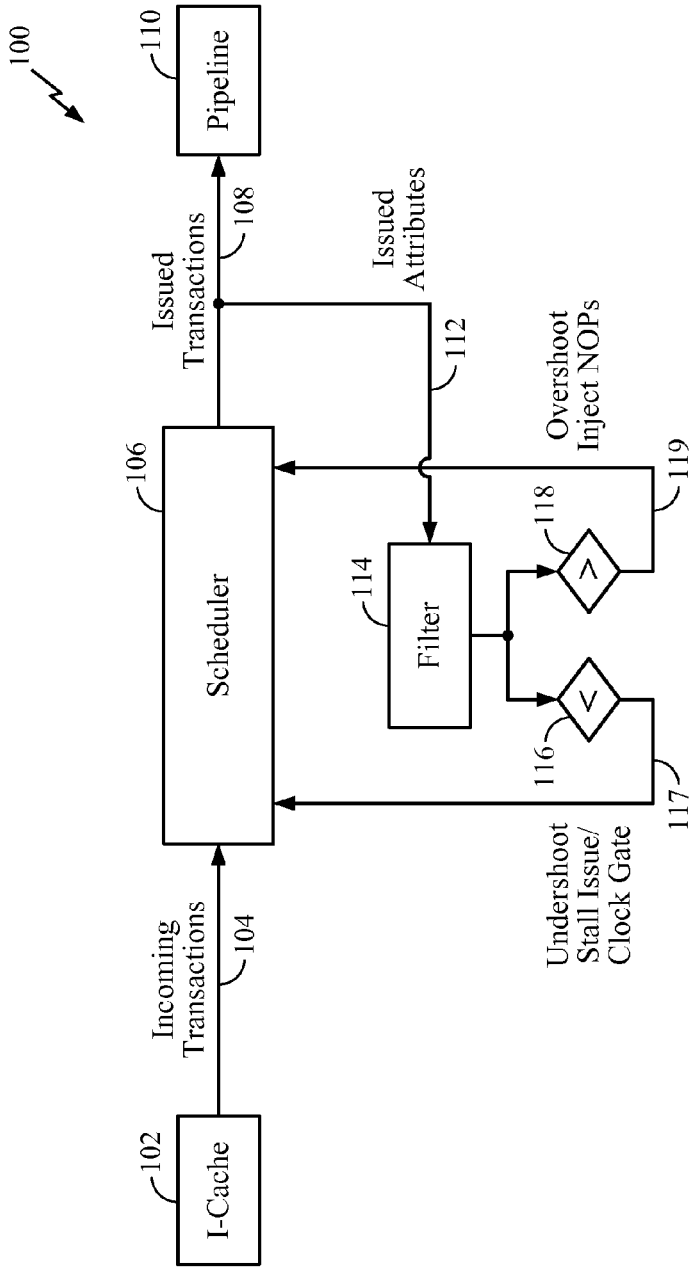
100
I-Cache
102
Incoming Transactions
104
Scheduler
106
Issued Transactions
108
Pipeline
110
Issued Attributes
112
Filter
114
<
116
>
118
Undershoot Stall Issue/ Clock Gate
117
Overshoot Inject NOPs
119

FIG. 1