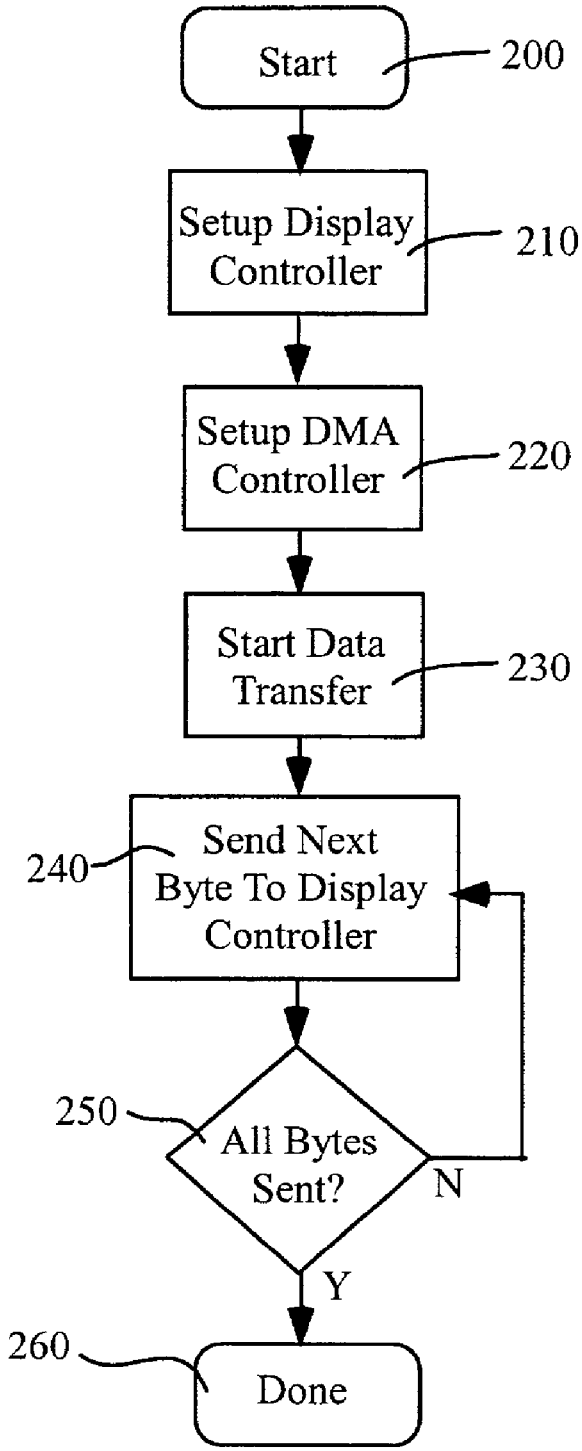
Start
200
Setup Display Controller
210
Setup DMA Controller
220
Start Data Transfer
230
240
Send Next Byte To Display Controller
250
All Bytes Sent?
N
Y
260
Done

Fig. 5