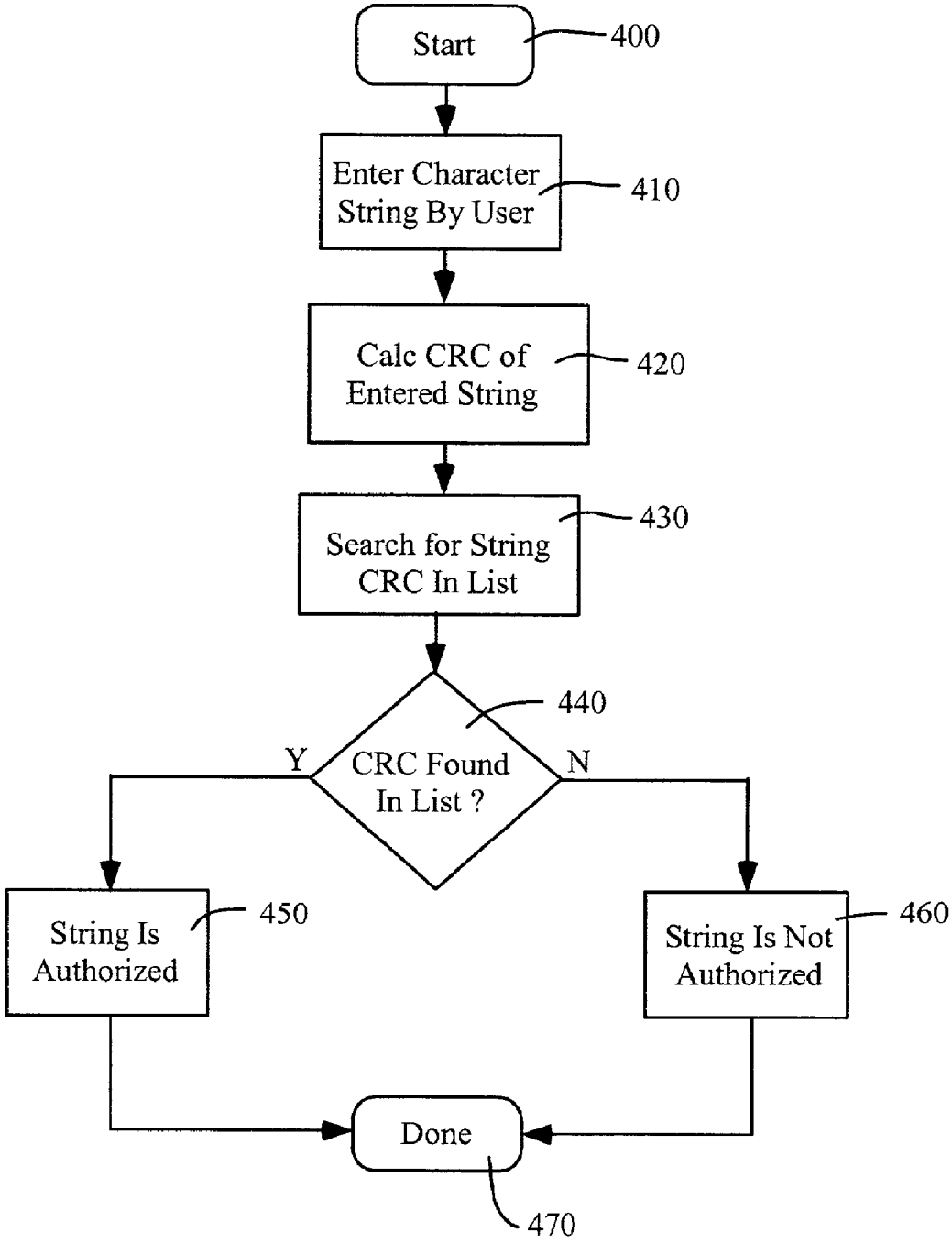
Start
400
Enter Character String By User
410
Calc CRC of Entered String
420
Search for String CRC In List
430
440
CRC Found In List ?
Y
N
String Is Authorized
450
String Is Not Authorized
460
Done
470

Fig. 6B