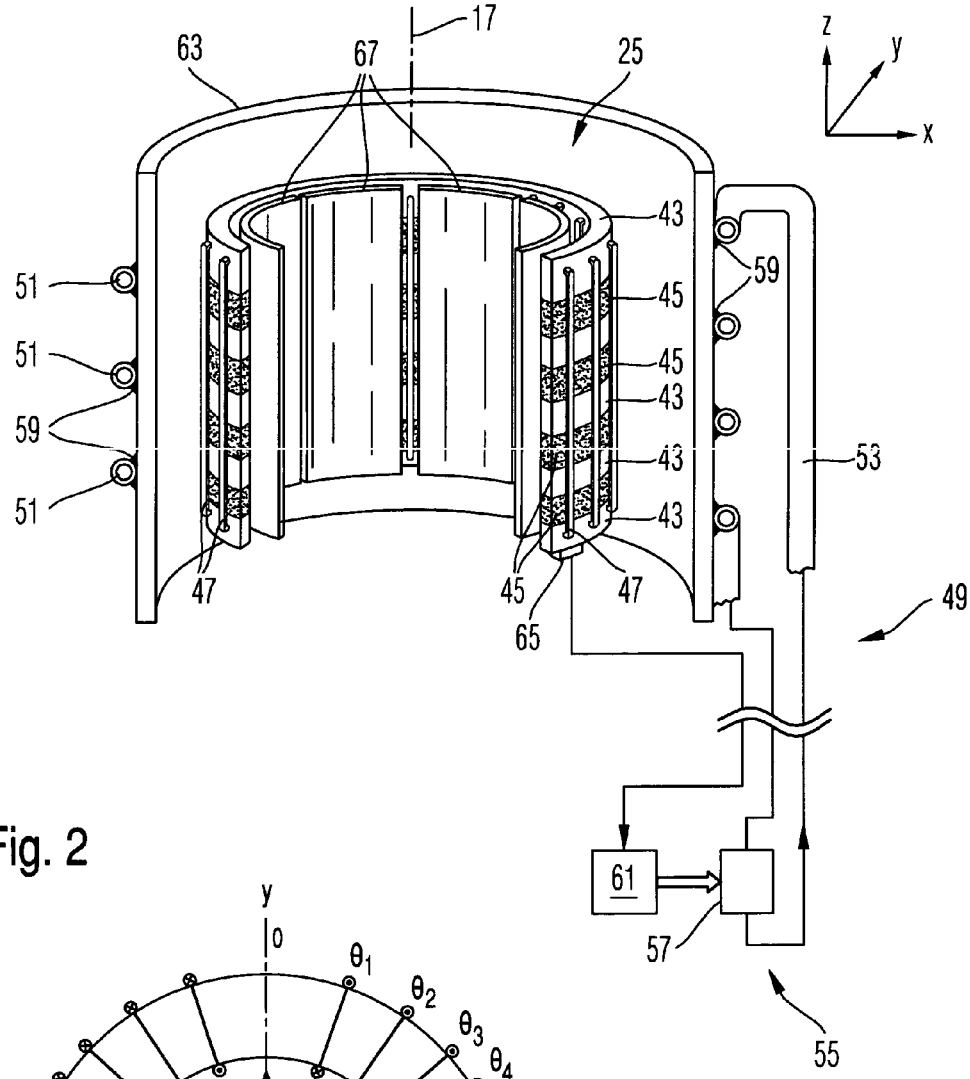
17
63
67
25
z
y
x
43
59
51
45
51
45
43
59
43
53
51
43
47
45
47
49
65
61
57
55

Fig. 2

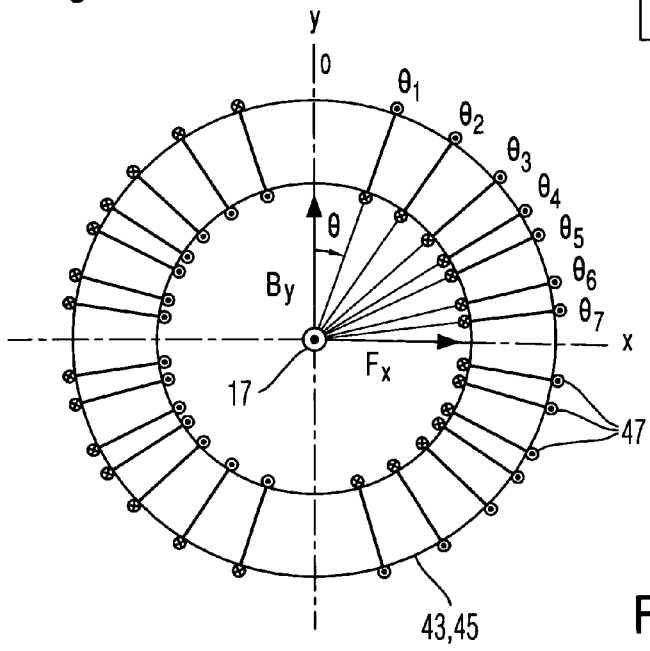
y
0
θ1
θ2
θ3
θ4
θ5
θ6
θ7
θ
By
x
Fx
17
47
43,45

Fig. 3