Fig. 2

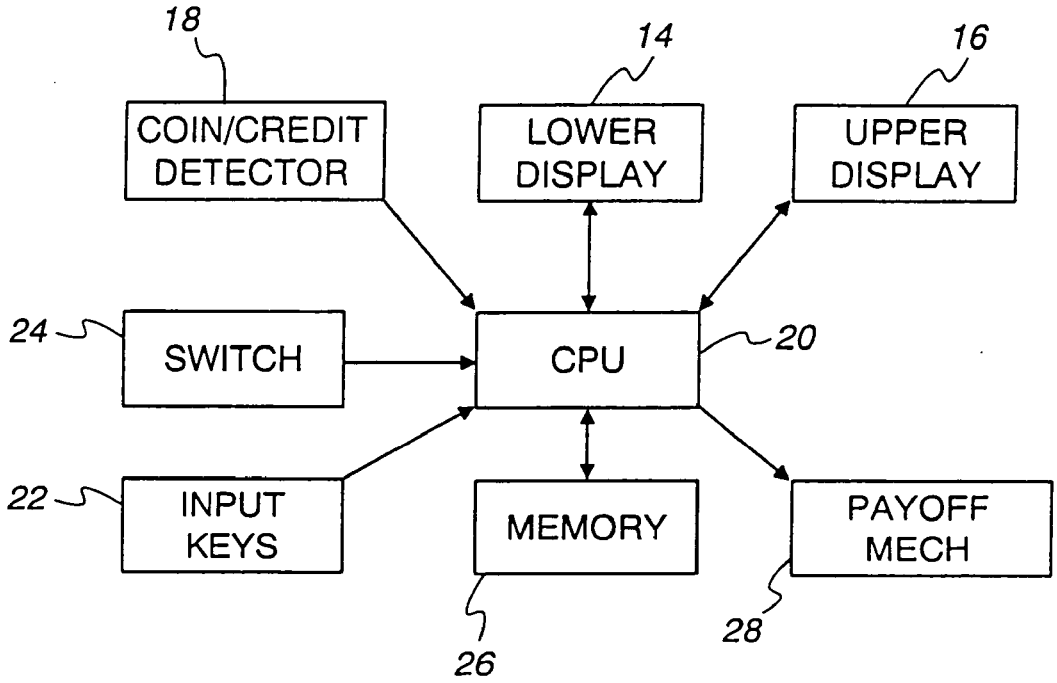
18
COIN/CREDIT DETECTOR
14
LOWER DISPLAY
16
UPPER DISPLAY
24
SWITCH
CPU
20
22
INPUT KEYS
MEMORY
PAYOFF MECH
26
28