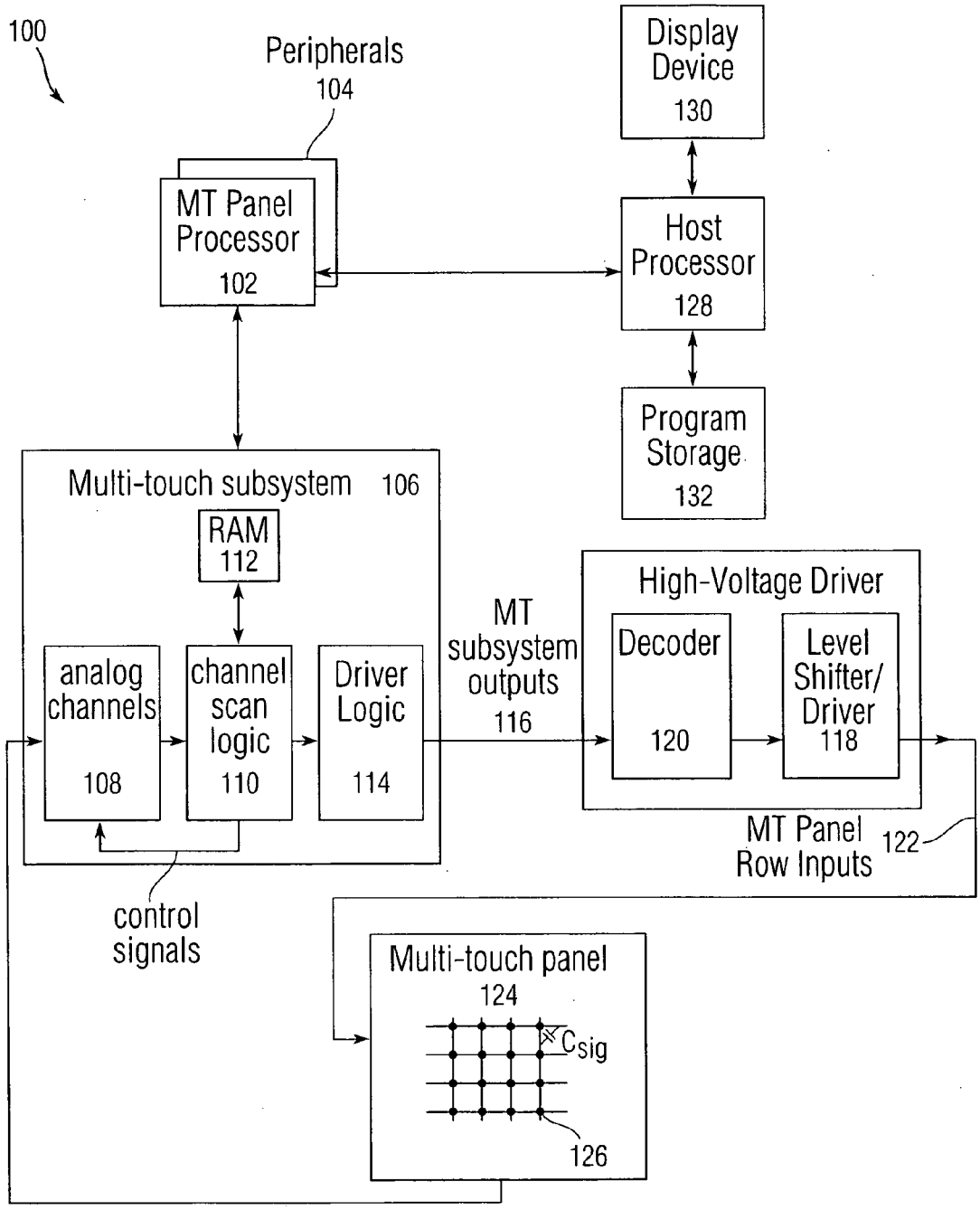
100
Peripherals
104
MT Panel
Processor
102
Display
Device
130
Host
Processor
128
Program
Storage
132
Multi-touch subsystem 106
RAM
112
analog
channels
108
channel
scan
logic
110
Driver
Logic
114
MT
subsystem
outputs
116
High-Voltage Driver
Decoder
120
Level
Shifter/
Driver
118
MT Panel
Row Inputs
122
control
signals
Multi-touch panel
124
Csig
126

Fig. 1