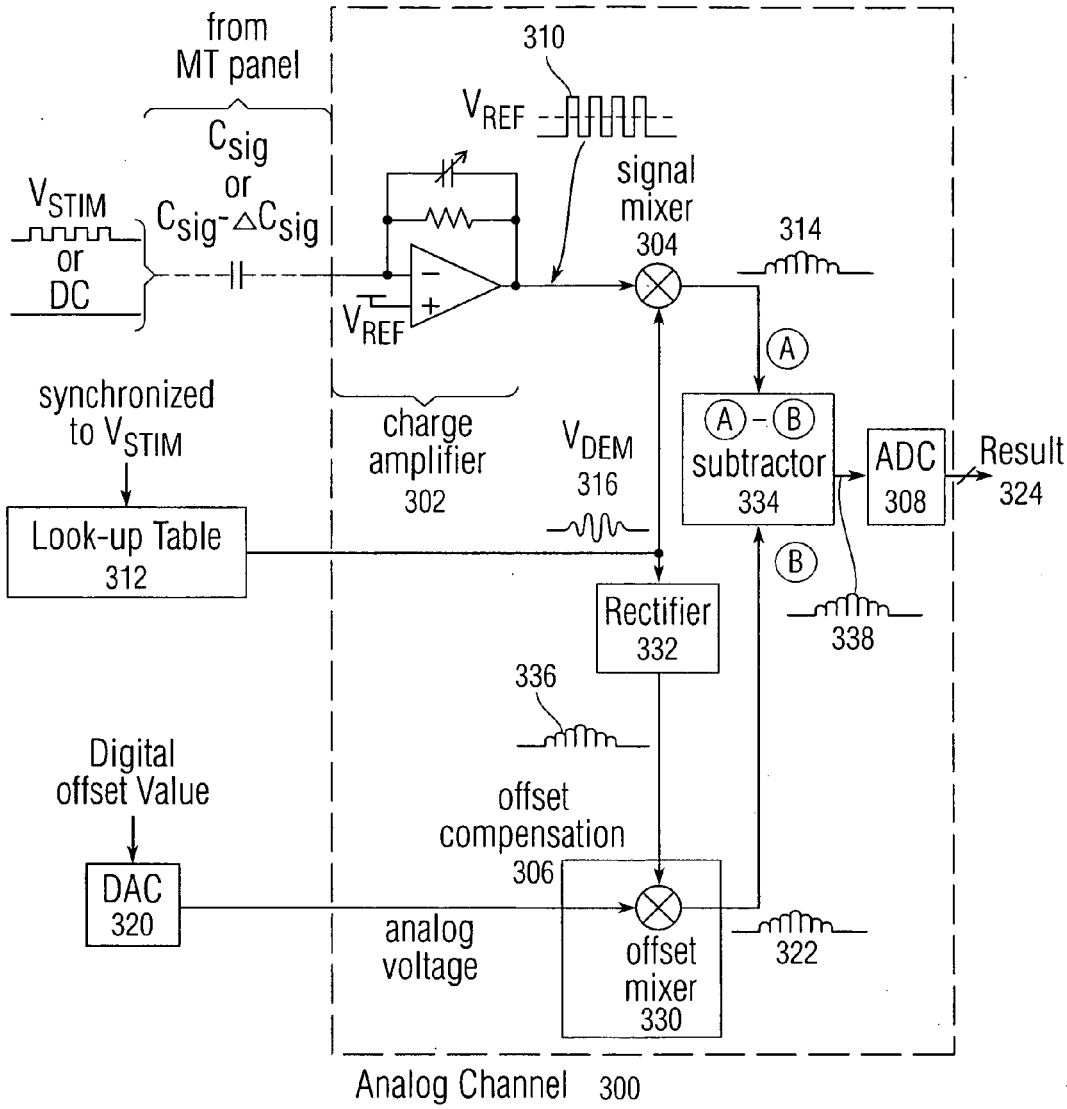
from
MT panel
310
V_{REF}
C_{sig}
or
C_{sig}-ΔC_{sig}
V_{STIM}
or
DC
signal
mixer
304
314
V_{REF}
A
synchronized
to V_{STIM}
charge
amplifier
302
V_{DEM}
316
A - B
subtractor
334
ADC
308
Result
324
Look-up Table
312
B
Rectifier
332
338
336
Digital
offset Value
offset
compensation
306
DAC
320
analog
voltage
offset
mixer
330
322
Analog Channel 300

Fig. 3a