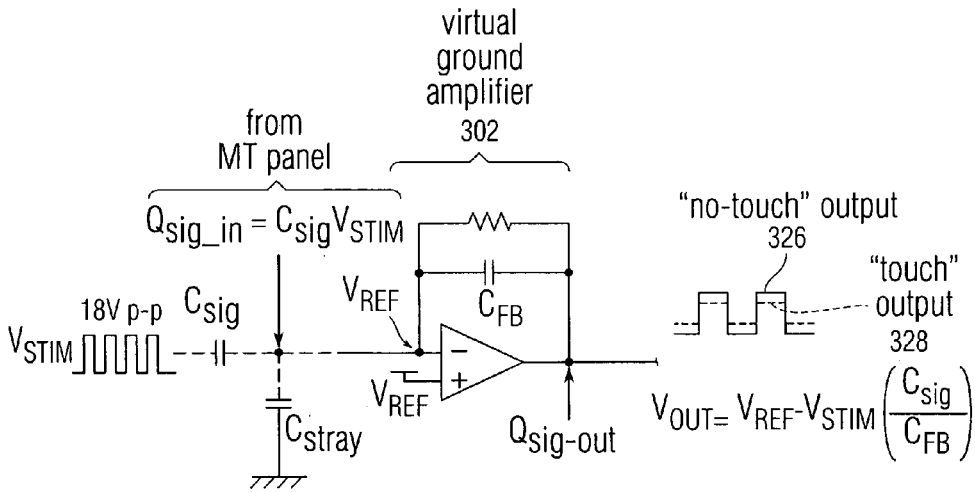
virtual
ground
amplifier
302
from
MT panel
Qsig_in = CsigVSTIM
"no-touch" output
326
"touch"
output
328
18V p-p
Csig
VSTIM
VREF
CFB
VREF
Cstray
Qsig-out
VOUT= VREF-VSTIM (Csig / CFB)

Fig. 3b

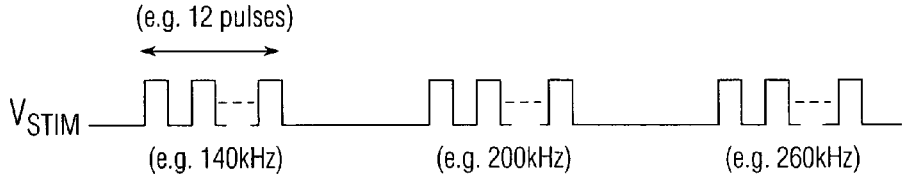
(e.g. 12 pulses)
VSTIM
(e.g. 140kHz)
(e.g. 200kHz)
(e.g. 260kHz)

Fig. 3c