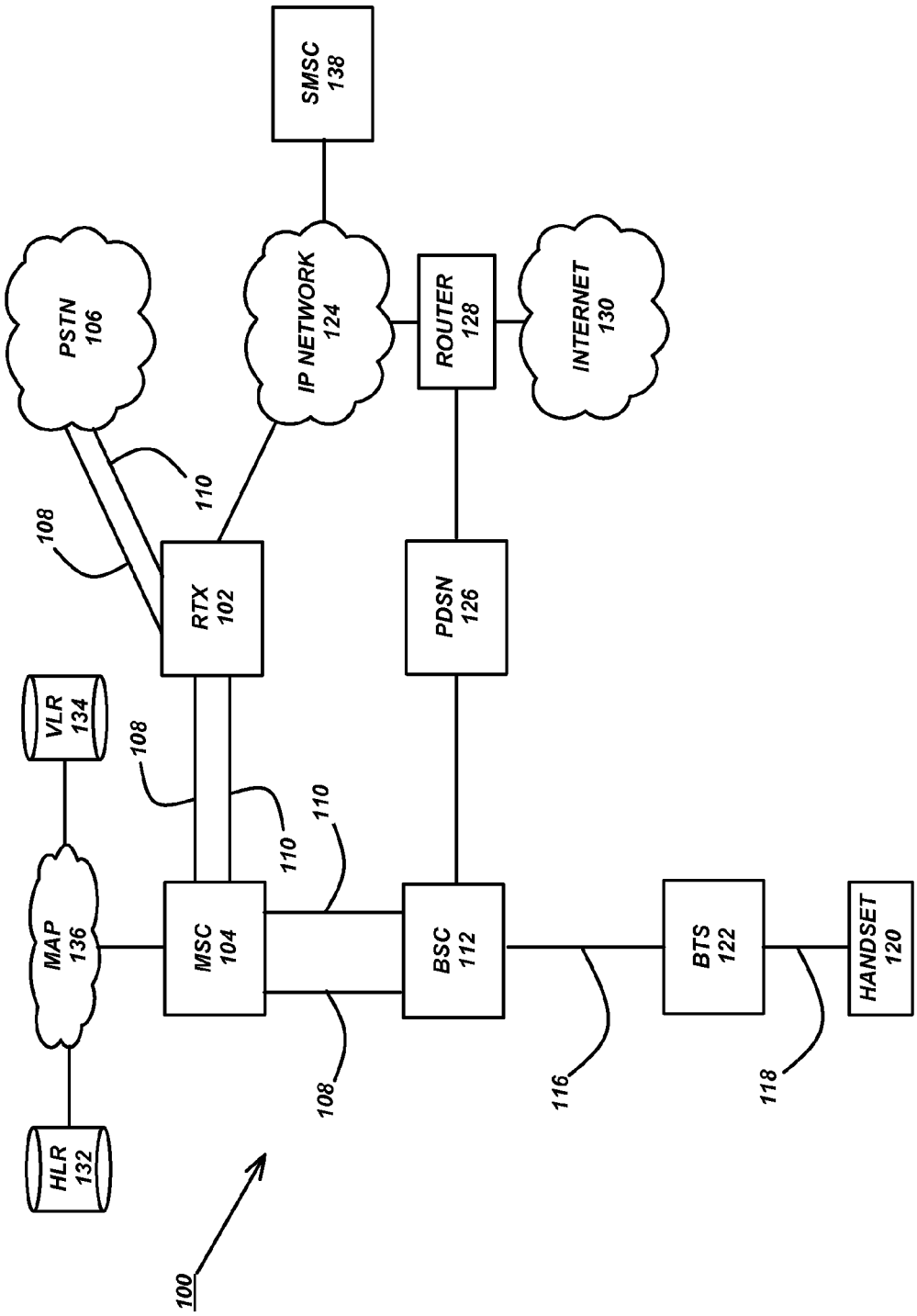
SMSC 138
PSTN 106
IP NETWORK 124
ROUTER 128
INTERNET 130
110
108
RTX 102
PDSN 126
VLR 134
108
110
110
MAP 136
MSC 104
BSC 112
BTS 122
HANDSET 120
108
116
118
HLR 132
100

FIG. 1